UPSTREAM®

UV PURE

UV Pure Technologies Inc.

ULTRAVIOLET WATER PURIFICATION SYSTEM

INSTRUCTION MANUAL

MODEL:
VOLTAGE:
SERIAL #:

CROSS FIRE® TECHNOLOGY

3101945

Certified to
IEC **PUBLICATION** 60335.1
EDITION 4th ††

INSTRUCTION MANUAL

Copyright UV Pure Technologies Inc. 2016
All rights reserved. No part of this document may be photocopied, reproduced, transmitted, or translated to another language without the prior written consent of UV Pure Technologies Inc.

UV Pure®, Hallett®, Upstream® ,Crossfire Technology® are registered trademarks of UV Pure Technologies Inc.

Publication Number: R800001Q3
Seventh Edition, December 2016

† 115V versions of the product are certified by Intertek
†† 100-240V versions of the product meet IEC 60335.1 Edition 4 and CE

NOTICE

THANK YOU
By purchasing the Upstream UV system with Crossfire Technology, you can now be certain that microbiologically safe drinking water is provided to every tap in the house.

The Upstream outperforms conventional systems by delivering highly effective UV dosage rates for the inactivation of pathogens, including:

- viruses
- bacteria
- cryptosporidium
- giardia
- legionella
- E. coli
- Total coliforms

The Upstream units are laboratory tested to achieve a minimum dose of 40mJ/cm^2.

UV Pure products conform to the applicable provisions of the Code of Federal Regulations (CFR) requirements including, Title 21, Chapter 1,Subchapter J, Radiological Health.

Please read the complete instruction manual before installing or operating the Upstream. Retain these instructions and the purchase receipt for the unit.

1. About the Upstream

The Upstream and the Hallett systems, manufactured by UV Pure Technologies, are the world's only ultraviolet water purification device with patented Crossfire Technology.

> Patented in US 6,707,048, Canada 2,463,503, Australia 2,002,333,084, Mexico 248805
> Patent Pending in Japan, UK, Europe, & Eurasia

UV Pure's Upstream UV systems employ revolutionary Crossfire Technology that is self-cleaning, self-monitoring, and fail-safe. The Upstream® system design with Crossfire Technology® eliminates the potential risks associated with conventional single lamp UV systems.

Committed to exceeding drinking water purification standards, UV Pure has turned conventional technology inside-out by running the water inside the quartz sleeve and including two lamps mounted in air, dual smart sensors, elliptical reflectors and an optional fail-safe solenoid valve.

Crossfire Technology is complete UV disinfection: Crossfire Technology incorporates *two* proprietary high-output UV lamps, with elliptical reflectors, that target pathogens with radiation from 360º, to deactivate pathogens and provide microbiologically safe drinking water.

Crossfire Technology is engineered to be risk-free and fail-safe: Crossfire Technology uses dual smart UV sensors mounted in air, which are designed to not foul and are more reliable indicators of system performance than ordinary systems. The lamps are fan-cooled and maintain consistent levels of UV output for maximum pathogen deactivation. Computerized alarms and an optional auto shut-off fail-safe valve are designed so that only safe water can enter your water system. Each system shipped to the North American market is supplied with a Transient Voltage Surge Suppressor (TVSS)/Surge Protective Device (SPD) that has been certified to the UL 1449 standard by an NRTL/C and includes integral Over/Under Voltage shutoff protection.

Crossfire Technology is self-cleaning: Crossfire Technology uses a stainless steel wiper to clean the inside of the quartz sleeve eliminating quartz fouling and the need for a water softener making abrasive quartz cleaning a thing of the past – saving money and the environment. The wiper is automated to cycle for 5 minutes every 4 hours. The cycle begins 12 minutes after power is applied.

Crossfire Technology is virtually maintenance-free: Crossfire technology utilizes two lamps mounted in air, outside the quartz sleeve so maintaining an Upstream is as easy as changing a light bulb with no system draining required. The UV lamps require replacement after 12 months of operation and notification of lamp replacement is given via a warning one month in advance.

Crossfire Technology is easy to install: Crossfire technology employs flexible

stainless steel hoses with Female Iron Pipe (FIP) connections for quick and simple installation.

The Upstream has a smart display: The operator interface allows for unprecedented access to information such as lamp lifetime, message history and UV intensity display.

The Upstream can show remote status: Be alerted to any change in system status immediately in any room with the optional Remote Monitor. The monitor is a handheld wireless device can be placed in a convenient location to provide operational information about the Upstream.

The Upstream has a built-in purge valve: The purge valve eliminates the need to shut down the unit in the event of no water flow for days (as long as a pressurized water supply is present). It is designed to prevent buildup of metals and minerals on internal components. The purge valve also eliminates nuisance alarms from changing water transmittance conditions.

The Upstream offers remote start up: The Upstream can be started or stopped via external device.

1. About the Upstream 3

2. Installation Instructions 6
Before Beginning Installation 6
Water Conditions - Pre-treatment Parameters 6
Safety Information 6
Parts Included 7
Product Specifications Table 8
Other Materials Needed 9
Tools Needed 9
Location 9
Time Required 10
Assembling the Unit 11
Connecting the Pipes 11
Parallel Installation 15
Plugging in the Upstream 15
Flushing Instructions 17
Control Interfaces 17
Remote Wireless Monitor (optional) 17
External Alarm Contacts 18
Remote Start/Stop 18

3. Operating Instructions 21
Unit Functions 21
Pushbuttons 21
Starting the Unit 22
Remote Wireless Monitor (optional) 23
Automatic Quartz Cleaning Device 23
Built in Purge Valve 23
Supplied Surge Protector 23
Shutting Down of Unit and Seasonal Use 24
Disinfecting the Plumbing 24

4. Menu and Troubleshooting 25

5. Maintenance 31
Replacing and Cleaning UV Lamps 31
Draining the Unit 33
Cleaning the Unit 34
Determining the Need for Cleaning 34
In-place cleaning 35
Upstream Spare Parts List 37
Disassembling the Unit 38
Cleaning/Removing the Quartz Sleeve 39
Reassembling the Unit 41

6. Service Record Sheet 43

7. UV Pure Technologies Limited Warranty 44

2. Installation Instructions

Before Beginning Installation

Water Conditions - Pre-treatment Parameters

Note this section is designed to ensure the optimal performance of your Upstream system. Please review the following pre-treatment parameters prior to installation.
If any specifications are of concern or unclear please contact your water treatment dealer or specialist. Note some of the information below is technical in nature and you may want to contact your water treatment specialist to review the parameters.

IMPORTANT - Should any of the following water parameters exceed the recommended limits; the system will not be serviceable under warranty.

Water Parameters for Treating Drinking Water:
The minimum water requirements for operating the Upstream system are:

- **UV Transmittance** (UVT) – see Product Specification Table. It is recommended for the water to be tested for UV transmittance in any applications using cisterns, surface water or ground water under the influence of surface water.
- **Total Dissolved solids (TDS)** - must be less than or equal to 1000 mg/L (mg/L=ppm)
- **Level of turbidity** - or cloudiness - of less than or equal to 1 NTU (nephelometric turbidity unit). A 5 micron sediment filter is recommended before the unit to reduce turbidity (the presence of a filter will also simplify disinfection of plumbing – see Disinfecting the Plumbing). For surface waters, a dual gradient pre-filter (75x25 or 50x5) is recommended.
- For temperature, pressure range, and other specifications, please see Product Specification Table.

The 1” Upstream units include a flow regulating device to limit the flow rate.

Warning: Removal of this device may allow the water flow to exceed the validated performance of the system which therefore may not provide the necessary UV dose to inactivate all pathogens.

Safety Information

GROUNDING

This UV unit must be grounded. In the event of a malfunction or breakdown, grounding will reduce the risk of electric shock by providing a path of least resistance for electric current. This unit is equipped with a cord having an appliance-grounding conductor and a grounding plug. The plug must be plugged into an appropriate outlet that is installed and grounded in accordance with all local codes and ordinances. The piping connected to the UV unit must also be properly grounded. Install a grounding lug or strap as required.

WARNING - Improper connection of the equipment-grounding conductor can result in a risk of electric shock. Check with a qualified electrician or service representative if you are in doubt whether the unit is properly grounded. Do not modify the plug provided with this unit; if it will not fit the outlet, have a proper outlet installed by a qualified electrician.

GROUND-FAULT CIRCUIT-INTERRUPTER
To comply with National Electrical Code, NFPA 70, the circuit where the UV unit(s) is connected must be protected by a ground-fault circuit-interrupter (GFCI). UV Pure recommends the use of Hubbell GFICs.

WARNING: Potential Shock Hazard
Use only a grounded electrical outlet when connecting the unit to a power source. If an extension cord is necessary, the cord should contain a ground and be rated for the same amperage as the unit or combined units. Do not plug in unit if water is present on the unit.

WARNING: Ultraviolet Light Hazard
The lamps in the unit emit ultraviolet (UV) light that can cause permanent damage to the skin & eyes. **Never look at the lamp when it is operating.** Do not plug the unit in unless it is properly secured to a wall (see Installation Instructions) and the front panel and ballast enclosure door are secure. Do not open the front panel or perform any service unless the unit has been unplugged. Never look into the unit or place any exposed skin into the illuminated areas when it is operating. Do not operate a unit that has been damaged or missing any components or safety devices.

Note that service to the unit does not require the removal of the side aluminum panels or aluminum endplates and they must remain assembled. The Upstream unit is not intended for use by young children or infirm persons without supervision. Young children should be supervised to ensure that they do not play with the Upstream unit.

Parts Included

- Upstream UV system complete with integral wall brackets (1)
- Ultraviolet lamps (2) – installed within the unit
- Instruction manual (1)
- Power cord (1) (located within packaging)
- Stainless flexible hoses (2) (hoses located within packaging)
- External dry contact for remote monitoring
- 20’ of Flexible hose for connection of purge valve to drain
- Transient Voltage Surge Suppressor (TVSS)/Surge Protective Device (SPD) for North American markets (120Vac systems)

Optional - Pre-treatment sediment and or carbon filter to remove water particles, odor or trace chemicals for improved taste.
- Automatic shutoff solenoid valve (included in bundled systems).
- Remote Wireless Monitor with 9V battery (1) (in bundled systems only).

Product Specifications Table

Models	**NC10-75**	**NC10-50**	**NC15-75**	**NC15-50**	**† NC30-75 1"**	**†† NC30-75 1.5"**
Max. Flow Rate[1]	11 gpm 41 L/min 2.4 m^3/hr	11 gpm 41 L/min 2.4 m^3/hr	16.5 gpm 62 L/min 3.7 m^3/hr	14.6 gpm 55 L/min 3.3 m^3/hr	28.5 gpm 108 L/min 6.47 m^3/hr	28.5 gpm 108 L/min 6.47 m^3/hr
Nominal Flow Rate[1]	10 gpm 38 L/min 2.3 m^3/hr	10 gpm 38 L/min 2.3 m^3/hr	15 gpm 57 L/min 3.4 m^3/hr	13.2 gpm 50 L/min 3.0 m^3/hr	26.4 gpm 100 L/min 6 m^3/hr	26.4 gpm 100 L/min 6 m^3/hr
min. UVT	75%	50%	75%	50%	75%	75%
Operating Pressure[2]	0-100 psig 0-690 kPa	0-100 psig 0-690 kPa	0-100 psig 0-690 kPa	0-100 psig 0-690 kPa	0-100 psig 0-690 kPa	0-100 psig 0-690 kPa
Water Temp. range[4]	34-104° F 1-40° C	34-104° F 1-40° C	34-104° F 1-40° C	34-104° F 1-40° C	34-104° F 1-40° C	34-104° F 1-40° C
Air Temp. range[4]	34-104° F 1-40° C	34-104° F 1-40° C	34-104° F 1-40° C	34-104° F 1-40° C	34-104° F 1-40° C	34-104° F 1-40° C
Voltage[3]	115Vac	115Vac	115Vac	115Vac	115Vac	115Vac
Power Draw	135W	175W	175W	200W	200W	200W
Dry Contact	Yes	Yes	Yes	Yes	Yes	Yes
Remote Monitor	Optional	Optional	Optional	Optional	Optional	Optional
Remote Start/Stop	Yes	Yes	Yes	Yes	Yes	Yes
Flow Restrictor	Yes	Yes	Yes	Yes	Yes	No
Pressure Drop at 75% rated capacity	14 psig (96 kPa)	14 psig (96 kPa)	14 psig (96 kPa)	14 psig (96 kPa)	14 psig (96 kPa)	4 psig (28 kPa)
Inlet & Outlet Port size	1" MNPT	1" MNPT	1" MNPT	1" MNPT	1" MNPT	1.5" MNPT
Nominal Dimensions (L x W x D)	32x8x9" (81x20x 23cm)	36x8x9" (91x20x 23cm)	36x8x9" (91x20x 23cm)	40x8x9" (101x20x 23cm)	40x8x9" (101x20x 23cm)	40x8x9" (101x20x 23cm)

[1] Flow rates are given in USgpm.
[2] The optional shutoff valve requires min. 10psig to operate.
[3] 100-240Vac versions available with same operating specifications.
[4] In extreme conditions with both low air and water temperatures, a Thermal Abatement Kit R400074 may be necessary
†The Upstream™ model NC 30-75 with 1" manifolds achieves a dose of 40 mJ per cm^2 at a maximum restricted flow rate of 28.5 US GPM.

††The Upstream™ model NC 30 with 1 ½" manifolds achieves a dose of 40 mJ per cm^2 at a maximum unrestricted flow rate of 28.5 US GPM. There is no flow restrictor installed as standard on this model of Upstream, therefore, a flow rate below 28.5 GPM will result in a dose greater than 40 mJ per cm^2, and conversely, a flow rate greater than 28.5 US GPM will result in a lower dose. This model is designed to allow for low pressure drop applications and can be programmed to achieve target deactivation levels in a broad range of applications and pre-treatment water quality, in combination with external flow restriction.

Other Materials Needed

The Upstream requires four # 12 to 1/4” diameter fasteners (not provided) to mount to a wall.
It also requires male NPT fittings for the hose connections and also for the optional solenoid valve (1”or 1.5”). The Upstream unit requires a drain for purge valve discharge line. These fittings, pipe insulation, and any piping compatible with the plumbing should be on hand before you begin installation. See Figure 1B and make a list of all necessary components including solder, paste and thread sealant. Bypass piping and valves that isolate the unit are optional, (but recommended) as is a drain valve for draining the unit.

Pipe insulation is to be wrapped around the top hose and any other piping overhead to prevent condensation from dripping back onto the unit.

Note: Teflon tape and thread sealant are not required to connect the Stainless flexible hoses to the Upstream or to the plumbing system – the FIP connectors mate with male NPT (National Pipe-Taper) fittings. The rubber washer in each end of the hose provides the seal. Ensure that the washer is in place before making the connection.

Tools Needed

- pipe cutter, torch and other typical plumbing tools for modifying piping
- Wrench for tightening hose connections
- Phillips screwdriver
- Slotted screwdriver

Do not operate a unit that has been damaged or that is missing any components. If a part is missing from your Upstream, contact your dealer**.**

The installation of the Upstream (see Figures 1A through 1E) should be done in compliance with all applicable federal, state/provincial, and local regulations. We recommend that the unit be installed by a qualified service technician. Failure to install the system properly may result in property damage (leaks/flooding) or personal injury (electrical shock) and will void warranty.

Location

The unit must be positioned vertically on a wall **(the performance of the system will be adversely affected if mounted horizontally)** See Figure 1A for clearances.

The Upstream is intended only for indoor use in a dry location. Should these minimum installation recommendations not be met, the system will not operate effectively.

The Upstream should be installed downstream of (after) any pre-treatment devices such as filters, water softeners etc and also any pressure tanks. However, it must be installed **upstream of (before) any branches** in the piping so that **all** the water is disinfected before splitting and distributing throughout the

UNIT (MODEL)	Ø NPT MALE	A inches [mm]	B inches [mm]	C inches [mm]	D inches [mm]
NC10-75	1"	32.00" [813]	21.38" [543]	20.00" [508]	24.52" [623]
NCi10-75					
DS10					
DSi10					
NC15-75	1"	35.75" [908]	25" [635]	23.75" [603]	28.27" [718]
NC10-50					
NC15-75					
NCi10-50					
DS15					
DSi15					
NC30-75_1"	1"	39.75" [1010]	27.63" [702]	27.75" [705]	32.27" [820]
NCi30-75_1"					
NC15-50					
NCi15-50					
DS30_1"					
DSi30_1"					
NC30-75_1½"	1½"	39.75" [1010]	27.63" [702]	27.75" [705]	32.27" [820]
NCi30-75_1½"					
DS30_1½"					
DSi30_1½"					

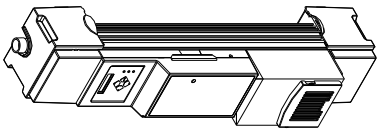

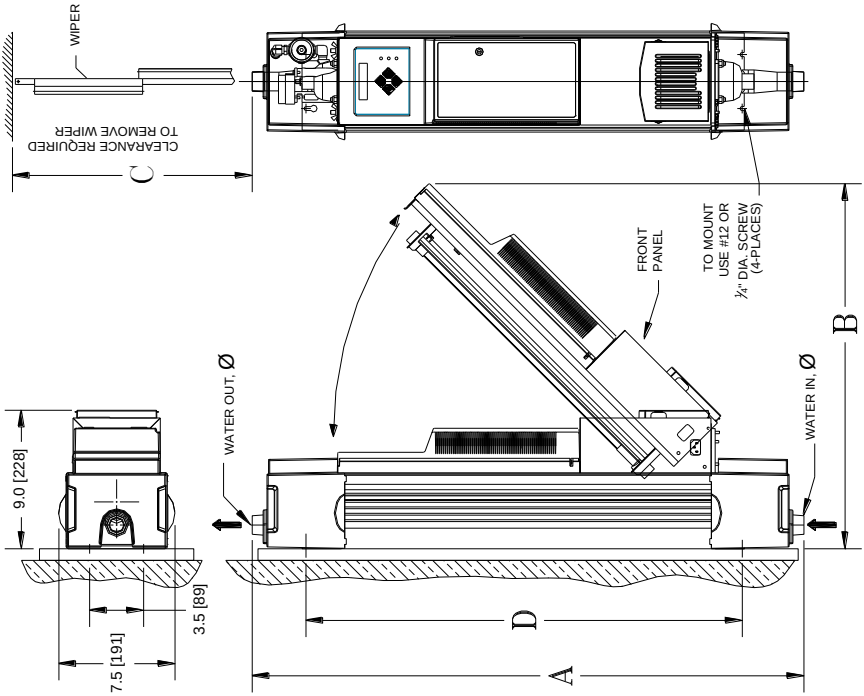

Figure 1A

home or facility. The unit **must be upstream** of any chlorine injection system. **Warning**: If connection is made to a potable water system, the system shall be protected against backflow.

Time Required

Please note that full installation of the Upstream requires shutting off the main water supply for a number of hours. If disinfection is necessary, all pipes must be

treated and flushed. Once the unit is plugged in, the new UV lamps may take from a few moments to several hours to reach full power. Having a Lamp Alarm is normal with a new system (or with newly installed lamps) until the lamps have reached full power.

Summary of Installation:
Unpack and install Upstream on wall
Install top & bottom hose to unit and to plumbing
Install optional Shutoff solenoid valve
Install optional bypass & drain plumbing
Install purge valve discharge line to a suitable drain line
Connect system power cord to supplied Transient Voltage Surge Suppressor
Connect Transient Voltage Surge Suppressor to GFCI

Assembling the Unit

Step 1: Unpack the unit, being careful to remove all packaging material. Inspect the unit for damage particularly the quartz sleeve – See Figure 4A for disassembly. Check if UV lamps fully inserted.

Step 2: The Upstream has keyhole slots for convenient mounting – use all four mounts. **Do not mount the unit directly to an outside wall; mount on plywood or shims – See Figure 1E.** Remove the top and bottom covers of the unit to make the mounting holes accessible.

Step 3: Connect the Stainless flexible hoses to both the top and bottom of the Upstream. Make sure that the sealing washer is inside the hose end before making the connection. Hold the stainless manifold with a wrench then tighten the hose securely. Wrap the top hose with pipe insulation. (Not provided)

Connecting the Pipes

We recommend that a qualified plumber or certified technician perform the water connections for your Upstream. **Water must flow into the inlet at the bottom of the unit. The outlet is located at the top of the unit.** Install the optional shutoff valve before the unit.

Step 1: Shut off the water supply. **Caution:** Always turn off the water supply before modifying or disconnecting any piping. Always open a faucet after shutting off the water supply to relieve water pressure and ensure that the water has been completely shut off.

Step 2: If you have decided to install an optional bypass line and drain, you may begin to install these fittings at this point. See Figure 1B or 1C for more information on how to connect optional bypass piping and drain.

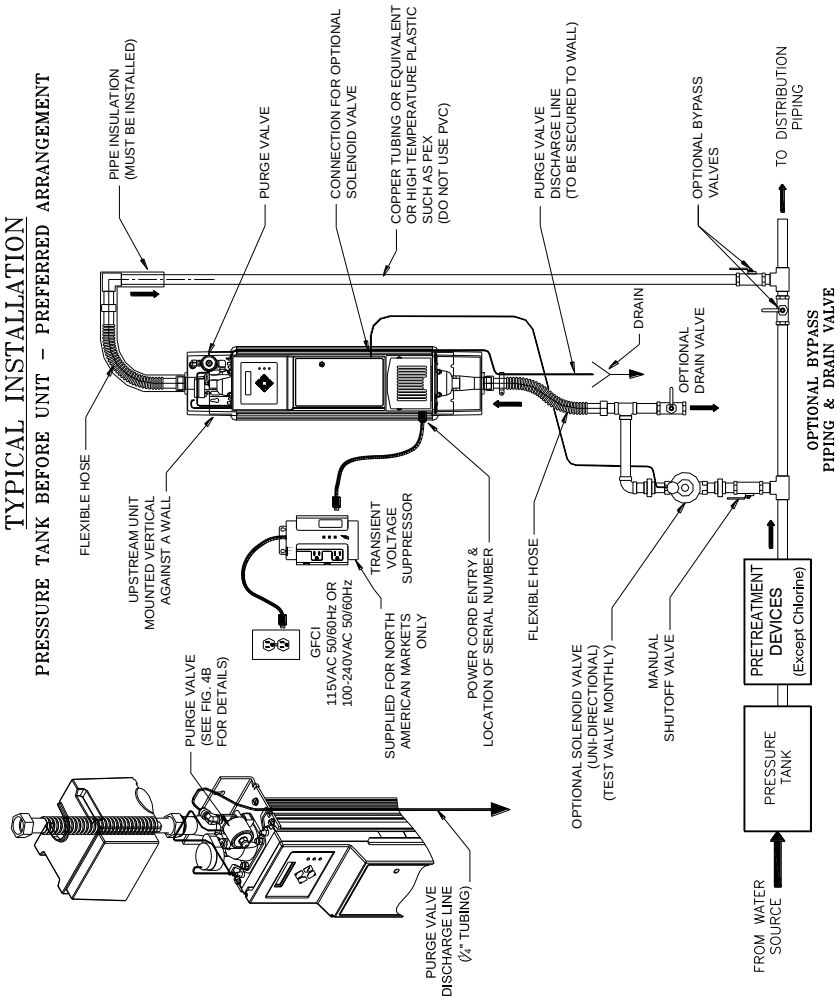

Figure 1B

Step 3: Connect the optional solenoid valve to the plumbing just upstream (before) the unit. Note the solenoid valve ensures that should the system fail, due to power loss, color in the water or low UV lamp output, the system will fail in safe mode and shut down the flow of water to your tap.

The direction of flow through the valve is important – **verify flow direction with label on the valve**. **Caution: over tightening a metal fitting into the valve will cause it to crack. Do not over tighten.** Keep the coil of the valve pointing upward (to prevent water from dripping on it). Water will not flow backwards through the valve. See Figure 1D

If you did not purchase the optional solenoid valve please move to Step 4 (b)

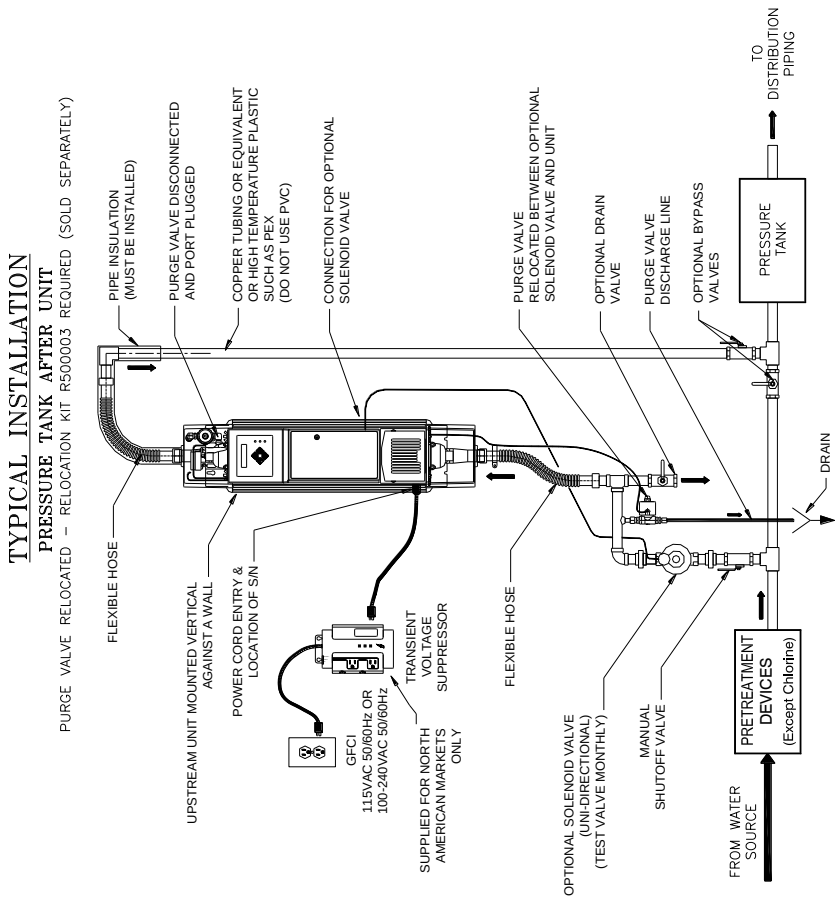

Figure 1C

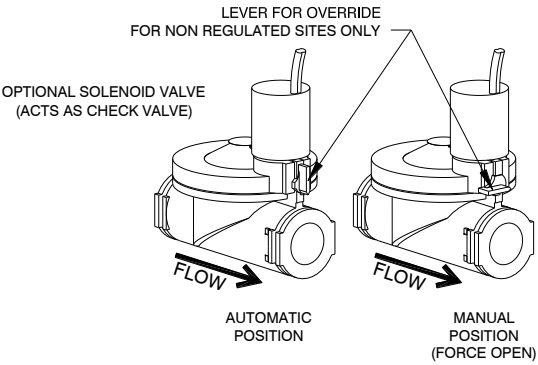

Figure 1D

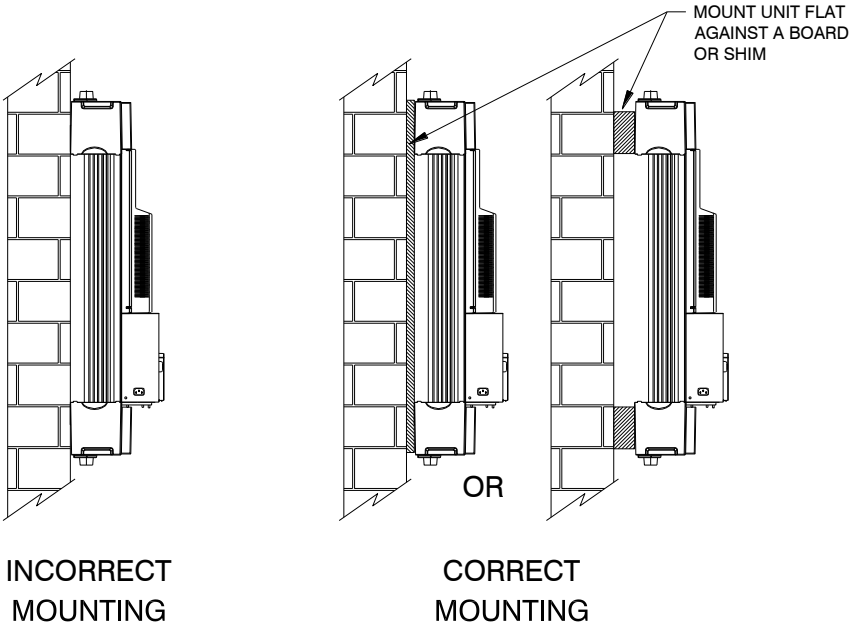

Figure 1E

Step 4: a) Connect the optional solenoid valve to the Stainless flexible hose attached to the bottom of the Upstream. Do not bend the hose excessively. Make sure the sealing washer is inside the end of the hose before making the connection. The optional solenoid valve plugs into the right hand side of the unit where a port is provided. **The valve is a non-serviceable component and nothing else should be plugged into this port.** Secure the cable from the valve to the wall. The optional solenoid valve is normally closed and must be powered to open. The valve has a manual override (white lever) that can be used to force the valve open should you require water for service/emergency purposes (note in the event of alarm and shut down it is recommended you boil your water). **In any regulated sites such as municipal applications, the manual override should not be used.** For normal operation, always leave valve in automatic position. In the Setup menu of the Upstream, toggle the valve to be "Installed" and a monthly reminder will appear to test valve.

b) If you did not purchase the optional solenoid valve simply attach the Stainless flex hose to the bottom of the Upstream and to the plumbing fitting.

Caution: Do not allow solder or solder flux to fall in or on the unit.

Step 5: Connect the remaining piping to the top Stainless flexible hose at the top of the unit. **Do not use PVC pipe or braided hose at the outlet –** during extended periods of no flow, water temperatures may exceed softening point of PVC if unit fails to purge. Metal pipe or high temperature plastic pipe such as PEX, should be used after the flexible hose. Make sure the sealing washer is inside the end of the hose before making the connection. Do not bend the flexible

hose excessively. Tighten securely.

Step 6: Connect the purge valve to a drain using the flexible tubing provided. Cut the end of tubing square and insert into the push-in fitting. The tubing can be run down the right hand side of the unit within the recess provided – the plastic cover may be removed to insert tube. The tubing should be secured to the wall or floor to prevent it from moving during purging cycle. If the pressure tank (water reservoir) is located downstream of the unit, the purge valve must be relocated. A Purge Valve Relocation Kit R500003 (sold separately) is required to have the water flow through the quartz. See Figure 1C

Step 7: Caution: Do not allow the inside of the unit to get wet. Before opening the water supply, double check all connections and cover the top of the unit with a rag or some plastic to prevent water entry. Ensure front panel is closed. Close any faucets you opened in Step 1 and then slowly turn on the water supply to check for leaks. If leaks exist, investigate the cause and repair.

Caution: Do not connect the unit to electrical power until the piping and unit are free of water leaks. The optional solenoid valve can be placed into manual mode to allow water to enter the unit. Switch back to automatic mode when done.

Step 8: Once the system is checked for leaks under full system pressure, install pipe insulation on the outlet hose and piping to prevent condensation from falling onto or into the unit.

Parallel Installation

When more than one unit is installed in parallel (flow split between units), the units must be installed with manual shutoff valves both upstream and downstream of each unit. This allows one unit to be serviced without interrupting the flow to the other units. Another requirement is the installation of a check valve downstream of the unit (after the unit). This will prevent the backflow of water to a unit. See Figure 1F.

Plugging in the Upstream

Step 1: Ensure that the front panel of the unit is closed and the unit is securely fastened to the wall. (**Note:** You should not open the front panel unless the unit has been unplugged).

Caution: Do not operate unit dry. There must be water in the treatment chamber to prevent damage to internal components.

Step 2: Plug the female end of the power cord into the power entry module located on the left side of the front panel. The power cord must be removed before front panel can be opened. See Figure 1B or 1C. Plug the male end of the power cord into the Transient Voltage Surge Suppressor supplied. Plug the Transient Voltage Surge Suppressor into a GFCI. Flip the switch on the Transient Voltage Surge Suppressor to ON position.

TYPICAL INSTALLATION OF PARALLEL UNITS

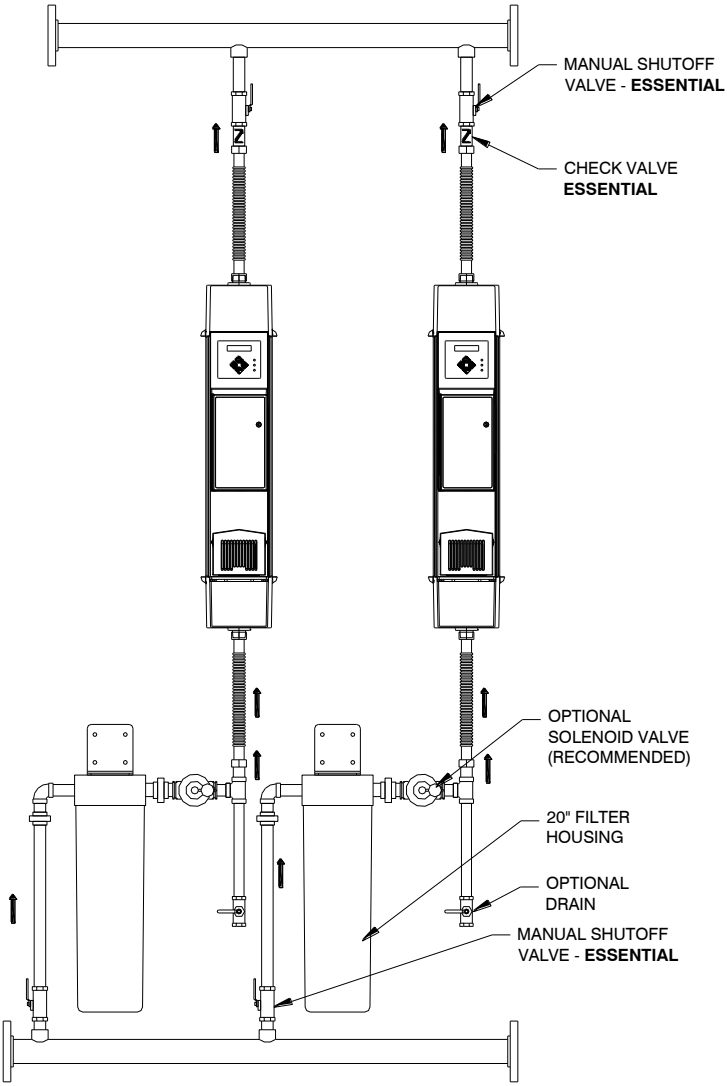

Figure 1F

Installation is now complete.

Important: after the unit has been operating for a few hours, unplug the unit and check all hose connections for leaks (the top hose in particular). Repeat this procedure periodically.

Proceed to system operation for further instruction to ensure optimal

performance.

Flushing Instructions

Flushing the system is required after installation or after any disassembly and cleaning. Flushing may also be required to remove colored water from the unit. Most filters (if installed) also require flushing prior to use – follow the manufacturer's recommendations.

The system may be flushed in two ways. It can be done manually by disassembling the unit and filling and draining the unit by hand (see Cleaning the Unit). Flushing may also be done while the unit is operating. Plug in the unit and open a faucet closest to the unit and run the water for a minimum of 15 minutes.

Control Interfaces

Remote Wireless Monitor (optional)

The Upstream system is available with a remote monitor that monitors the system operation and alerts you to any change in status. If the unit did not come with a Remote Monitor, the main unit will display "Radio Initialize Problem" or "Radio Device Not Installed" upon start up – please ignore this message. If the unit is equipped with a Remote monitor, install the 9v battery (included) in the remote monitor and place the monitor in a location of your choice. The remote will operate up to 164 feet (50m) from the Upstream system location, (Please note that masonry walls decrease the distance the remote can communicate with the Upstream system). The remote will run through a diagnostic and then sync with your Upstream system and display a message indicating unit status. If a warning or alarm is displayed, detailed information will be available at main unit. If the remote loses communication with the Upstream, it will display "No Sync". Move the monitor to a different location until communication has been reestablished.

The radio frequency used by the remote is 2.4GHz and has FCC modular approval grant to meet FCC Part15, EN300 328-1, EN301 489-1, Industry Canada RSS-211.

Setup procedure

Step 1: Using the Setup Menu on the main UV Pure unit, select "Bind Remote Device" and choose a bind number (This is a number from 0 to 40 to differentiate each unit in parallel or series.) Each Hallett within an approximate 500 feet, line of sight, range should have a different bind number**.** Once you have chosen a bind number press Enter. Leave menu display at "Remote Device Bind #"

Step 2: Pick up the remote monitor and then connect the battery. The remote will display "Init…, Version # of program and then "UNBOUND" (if never initially bound). Press and hold the button and the display on the remote monitor will then show "BINDING". The button can be released at this point. When the display on the remote shows "BOUND", the process is complete. If the unit does

not display “Bound”, repeat the process with a different Bind # on the main unit (even if a message suddenly appears, repeat the process). It must say “BOUND” on the remote monitor.

Note: Pressing and holding the button of the remote monitor at any time will initiate another binding process.

Step 3: Syncronization is now complete, return to the main UV Pure unit. You must return the screen from Bind # to “Bound” by pressing Enter and then the Down Arrow button. This will cycle the bind numbers down until you get the “Bound” screen. Once at “Bound”, press Enter and then press Left Arrow several times to return to main page.

Step 4: Disconnect the battery on the remote monitor and then reconnect. It will then sync up with main unit within a few moments.

External Alarm Contacts

The Upstream system provides an external “dry” contact for remote alarms or autodialers – the word “dry” indicates no voltage present at the contact. It can be wired normally open or normally closed. The contact is referred to as a “System Run” condition. The status of the contact changes when the Upstream unit changes from a normal condition (energized relay) to alarm condition (de-energized relay). The contact is meant for control purposes only, not to drive devices. The maximum rating of the contact is 24 Vdc 1A. When the unit is awaiting a remote start, the relay is energized. See Figure 1G

Remote Start/Stop

The Upstream has remote start/stop capability which allows it to remain idle without operating the UV lamps. When a signal is given (voltage applied), UV lamps are energized. This is convenient for locations requiring periodic disinfection such as pump houses. **It is recommended to limit starts and stops of the UV lamps to two per day**. Any more may jeopardize lamp life and is not covered under warranty. The voltage rating range of the contact is 22-36 Vdc, 0.5W max or 16-28 Vac, 0.5W max. The remote start/stop is disabled by default and can be enabled in the Setup section of the menu.

There is a plastic knockout provided at the base plate of the unit for cable entry. See Figure 1G & 1H.

Caution: Unplug the unit before gaining access to do any wiring or accessing ballast enclosure.

The door to the ballast enclosure must be opened to gain access to external alarm and remote start/stop contacts. As well, the blower and blower housing must be removed for cable entry. See Figure 1G & 1H.

Step 1: Loosen screw that secures door – no need to remove.

Step 2: Unplug blower from circuit board – connector J6.

Step 3: Open blower housing panel and remove screw that secures it.

Step 4: Gently pull out blower housing and blower allowing connector and wire to follow.

Step 5: Remove knockout & install conduit / external wiring up to circuit board and terminate. Wiring may be secured internally to standoffs but allow enough slack to allow front panel to open.

Step 6: Test opening of front panel to ensure newly installed wires do not restrict movement.

Step 7: Replace blower and blower housing and allow connector & wire back to the circuit board. Secure with screw. Ensure wires do not obstruct blower.

Step 8: Plug in blower connector to J6.

Step 9: Close ballast enclosure door and secure with screw.

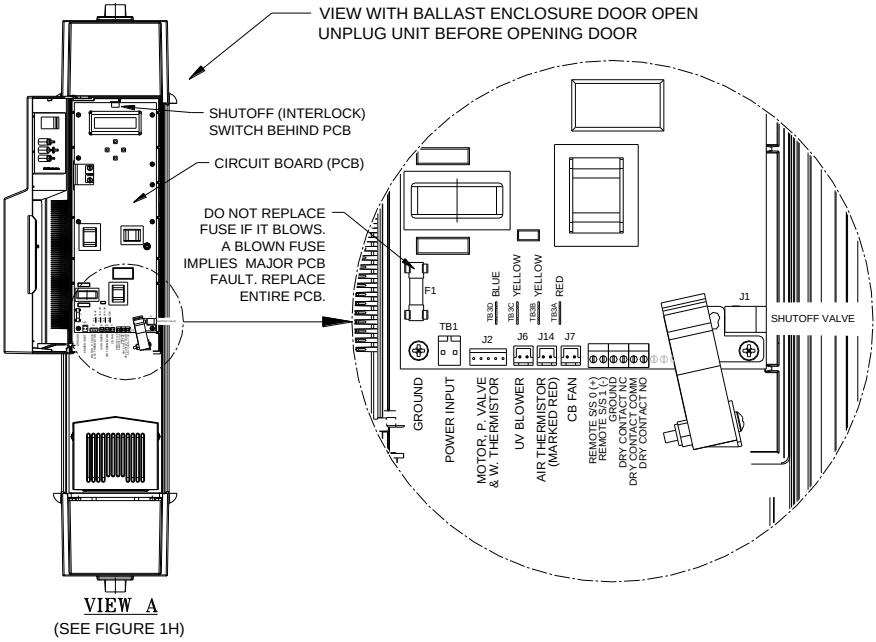

Figure 1G

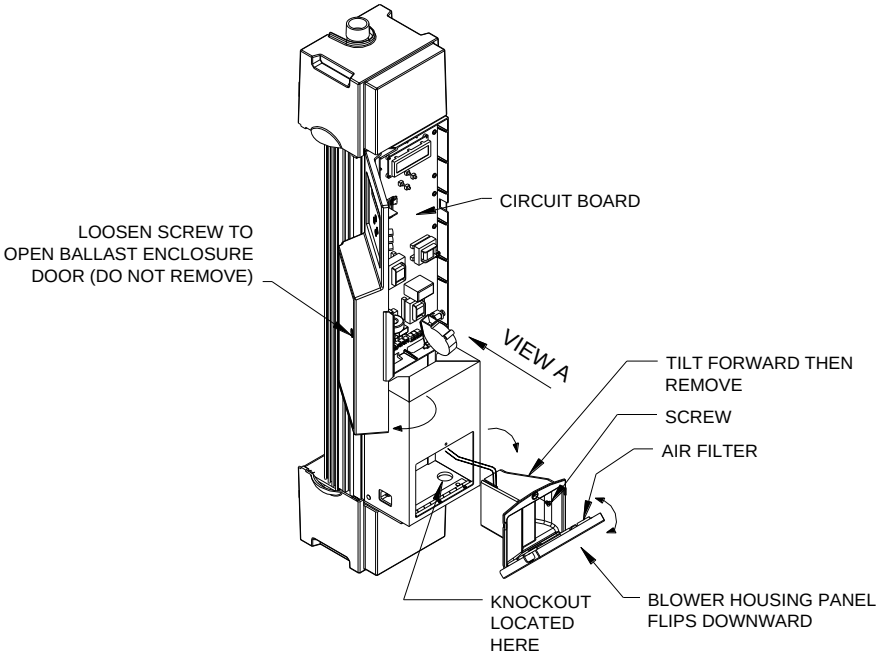

Figure 1H

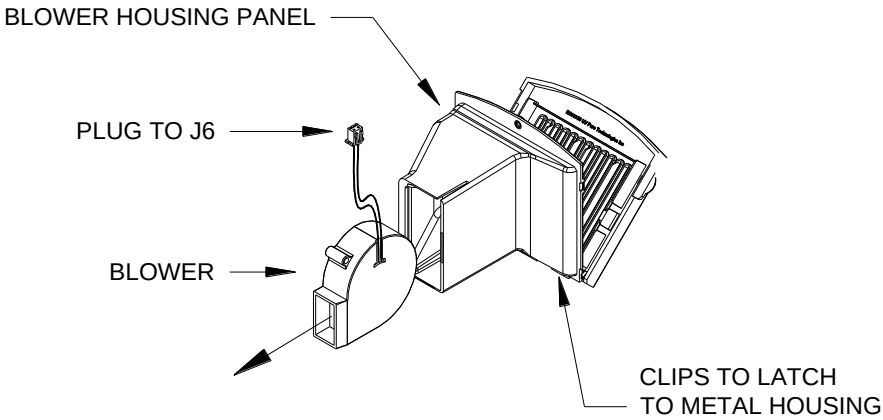

EXPLODED VIEW OF BLOWER AND BLOWER HOUSING PANEL

Figure 1I

3. Operating Instructions

The Upstream applies advanced Crossfire Technology, yet is simple to operate. The automatic quartz cleaning technology has been designed to reduce, and in most cases, eliminate the periodic shutdowns necessary to inspect the cleanliness of the quartz. The only required maintenance is the replacement of the two UV lamps every 12 months (note - if you shut your system down for seasonal use - the lamp life will be extended)

Unit Functions

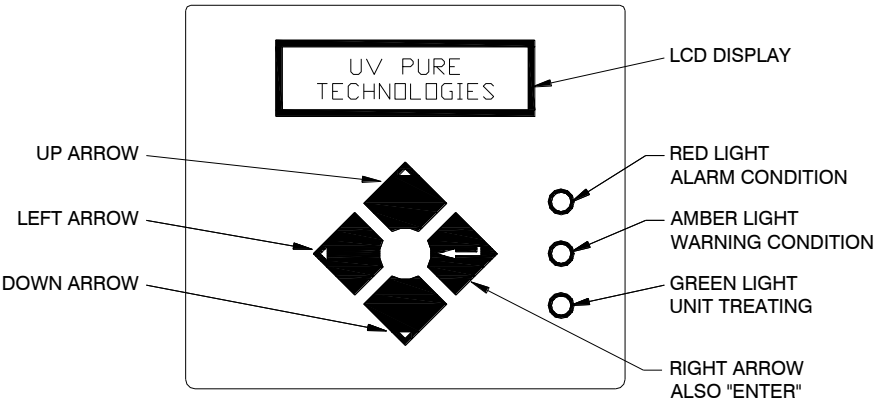

Figure 2

There is an LCD display, four pushbuttons, and three indicating lights on the front panel. See Figure 2. The pushbuttons allow you to navigate the menu screens on the LCD display. See Menu section

LCD Display

The 2 line backlit display provides status information including lifetime remaining on lamps, message history and setup options. See Menu Section.

Pushbuttons

Left Arrow – press to move back to a previous menu and or to escape from a menu choice.

Up Arrow – press to move up a menu in a section and also select data whether it is menu choices or numerical values.

Down Arrow – press to move down a menu in a section and also select data whether it is menu choices or numerical values.

Right Arrow – press to move right into a sub menu or to “Enter” a selection or save a value.

Indicating Lights

Green Light – situated at the bottom, an illuminated green light indicates the Upstream is treating normally. A flashing green light means the lamps are not yet at full power or the unit is in standby mode awaiting a remote start.

Amber Light – situated in the middle, an illuminated amber light may indicate the Initial Set-up process has begun or a warning of some condition that, if not addressed, could impact the Upstream's performance. Warnings should be addressed as soon as possible. Warnings are accompanied with a single beep, messages and troubleshooting tips on the LCD display.

Red Light – situated at the top, an illuminated red light indicates an alarm which has significantly impacted the Upstream's performance and it must be addressed immediately. Alarms are accompanied with continuous beeping, messages and troubleshooting tips on the LCD display.

Audio Alarm
The audio alarm or beeper, will alert the operator to any conditions out of the ordinary, A single beep will sound if a warning occurs; continuous beeping will sound if an alarm occurs – see Menu & Troubleshooting Section for more details on warning and alarms. The audio alarm may be disabled temporarily or permanently in the Service Menu.

Starting the Unit

Caution: Do not operate unit with the front panel or ballast enclosure door open. Do not try to open the front panel or ballast enclosure door when the unit is operating – Shutdown and unplug the unit first before trying to gain access. The Upstream contains a safety switch that will disable the lamp power supply (ballast) if the front panel is not completely closed.

Caution: Avoid continuously starting and stopping the unit within a 24 hr period, as this will accelerate the aging of the UV lamps (note: however shutting down the system for seasonal use will extend lamp life)

Caution: Do not operate unit dry. There must be water in the treatment chamber to prevent damage to internal components. In the event of a lack of water or water supply being turned off, shutdown the unit until the water supply can be restored. In the event of a power failure, the unit will shut down and the solenoid valve (optional) will close, preventing water from flowing. When the power returns, the unit will automatically restart and perform a self-test. If no faults are detected, the unit will return to normal operation and the solenoid valve (optional) will open. Note that even during a brownout, the supply voltage may drop low enough to cause the unit to shut down. If the unit does not automatically restart as described above, shutdown and unplug the unit and plug it in again.

Step 1: Plug the unit into the Transient Voltage Suppressor, and plug the Transient Voltage Suppressor into a GFCI. Flip the switch on the Transient Voltage Surge Suppressor to ON to start the lamps. **Caution:** Never look into or place any exposed skin into the illuminated areas when the unit is operating.

Step 2: Once the unit is plugged in, all three lights will illuminate an audible alarm will sound and the display will become active. This verifies that the lights and the audible alarm are functioning. The unit then performs a self-test. When units are new or when the UV lamps have been replaced and lifetime counter

has been reset, the system will begin an Initial Set-up process while the lamps are reaching full power. The green light will flash and the amber light will be on solid. This process may last 24 hours. When the Initial Set-up process is complete, a solid green light appears and the message “Unit Treating” will be displayed. The solenoid valve (optional) will be allowed to open during the Initial Set-up process. This is the normal operating mode of the unit.

During normal operation if a power outage occurs, the unit will start up within a few minutes and an alarm will occur if the unit is not treating within 10 minutes.

If the UV lamps fail to ignite, the unit will try several more times before issuing an alarm. Unplugging the unit and plugging it in again will allow the unit to try starting the UV lamps again.

Remote Wireless Monitor (optional)

The Upstream unit is available with a wireless alarm that can be positioned up to 164 feet (50m) from the unit. The remote device has a LCD display to provide status messages and an audible alarm that sounds in the event of a system fault – detailed information about the fault would be available at main unit. The remote device is battery powered (9V) and can be conveniently located near the kitchen tap for a home or in the office for a school. Pressing the button on the remote will silence the beeping when an alarm occurs and it will cause any message to be redisplayed. If several warnings or alarms conditions exist at one time, pressing the button repeatedly will cycle through all messages.

Automatic Quartz Cleaning Device

The self-cleaning feature of the Upstream system involves a wiper turning inside the quartz sleeve. The wiper operates soon after power up of the lamps and then every 4 hours it will cycle for 5 minutes. The wiper can be enabled anytime in the Service section of the manual.

Built in Purge Valve

The Upstream contains a flushing or purge valve that cycles water through the unit during long periods of no water usage. The Upstream monitors water usage by measuring the rise in water temperature within the treatment chamber. During periods of no water flow, the purge valve will expel up to 1 gallon (4 liters) of water every 60-90 minutes depending on inlet water temperature and pressure.

Supplied Surge Protector

UV Pure supplies Transient Voltage Surge Protectors (that have been certified to UL1449 standard or equivalent that includes integral Over/Under Voltage shutoff protection) with its Hallett and Upstream models in North America to help protect against damage from power fluctuation. Those models must be plugged into the supplied protectors in North America, and into equivalent protectors outside North America (not supplied with systems in those markets).

UV Pure Technologies' UV water purification system models are designed to operate within normal power grid specifications (voltages and frequencies), worldwide. However power spikes, surges and brownouts are a common occurrence in all countries. When that happens, line voltages may fluctuate outside the systems' operating specifications.

Installation of the supplied TVSS/SPD between the UV system and the power source will increase the ability of the system to survive transient events on the AC power. This will help to ensure uninterrupted water treatment and reduce the risk of costly repairs due to damage from power spikes, surges and brownouts which are NOT COVERED BY UV PURE TECHNOLOGIES' Limited Warranty.

Shutting Down of Unit and Seasonal Use

To power down the Upstream, press Enter when the screen displays "Unit Treating". Select *Shutdown Unit* from the main menu and after the message *You may safely unplug your unit* appears, unplug the unit. If an alarm condition exists, the Upstream is to be simply unplugged to power down.

The Upstream can operate for extended periods of time without water usage **as long as the water supply is present.** The unit may be shutdown in the case of seasonal residences or during a vacation. If the possibility of freezing exists, the unit and any filters must be drained. (See Draining the Unit.) Upon returning, reconnect all fittings, close all valves and turn on water supply. Plug in the Upstream and when operational, flush the water through the unit for at least 5 minutes.

Caution: When the unit is not operating, the solenoid valve (optional) remains closed. If the solenoid valve is forced open or if the optional bypass piping is used, untreated water may enter the plumbing system. Emergency use of untreated water is the only situation where the bypass piping should be used. Any water used for drinking should be boiled. Unplug the unit if the bypass is used. **Do not run the unit dry. This will cause potential damage and scratching of the quartz sleeve.**

Disinfecting the Plumbing

Disinfection of the household or facility plumbing should be performed after the Upstream has been installed and is operating. This procedure should also be done if the unit is not functioning normally, if the bypass has been used, or if there has been a high background bacteria count in a water sample. Disinfecting the plumbing will ensure that any potential bacteria or contaminants in the distribution system are treated prior to system use.

Please note that this procedure is ineffective against protozoa that can be found in surface water or shallow wells under the influence of surface water. Under these circumstances, it is important to perform the disinfecting procedure and then operate the Upstream.
This procedure does not work with sediments or heavy biofilm and encrustations, which must be removed mechanically.

The accepted practice for sanitizing the household or facility plumbing involves adding 50 ppm chlorine from bleach for 12 hours and then flushing. This can be achieved by doing the following:

Step 1: Turn off the unit by unplugging it.

Step 2: Shut off the water supply and relieve the water pressure by opening a faucet.

Step 3: Remove the filter from its housing and fill the housing with bleach.

Step 4: Re-mount the housing (but not the filter) and plug in the Upstream to turn it on.

Step 5: Once the Upstream is operating, turn on the water supply and run water to all faucets (hot and cold), toilets, the washing machine and other water-using appliances – the bleach must fill every inch of plumbing. The Treatment Alarm may arise due to low UVT after the introduction of bleach. If this occurs, use the manual override on the solenoid valve (optional) to keep valve open during procedure. **Return override to auto position afterward.**

Step 6: When you detect the odor of chlorine at each spot, stop running the water and let the bleach remain in the lines for at least 12 hours – **turn off the Upstream unit**.

Step 7: After the waiting period is over, plug in the unit. Once stable, flush every line for at least five minutes or until the odor of chlorine is gone. See local regulations for proper disposal of chlorine residual, especially in the case of discharge into a septic system.

Step 8: Now that the disinfection procedure is complete you will need to return the filter to its housing. Shut off the water supply, relieve water pressure by opening a faucet, and return the filter to the housing. Allow a few days after a disinfection procedure before getting a sample since residual chlorine may affect the results.

Have the water tested by a local recognized testing agency prior to any water consumption. UV Pure partners with water testing organizations in select locations throughout North America. Contact UV Pure for potential water testing partners: 1-888-407-9997. The testing should be performed on a regular basis as required by local regulations.

Caution: Do not allow corrosive chemicals to remain in the unit for more than 12 hours – Do not operate unit during this time period as heating the water will increase corrosive nature of chemicals.

4. Menu and Troubleshooting

The Upstream will run unattended until an alarm, or fault, arises. If an alarm does occur, the solenoid valve (optional) will close, preventing water from flowing. The green light will go out, the red light will illuminate, the audio alarm will beep, the

remote will beep and an alarm message is displayed on the Upstream. The fault should be corrected to return the unit to normal operation and have the water flow again. When an alarm occurs, navigate to the “Alarm Condition Exists” screen by pressing LEFT arrow several times. Next press RIGHT arrow to silence the audio alarm and review which alarm condition exists. The menu will bring you to Alarms and Troubleshooting section for assistance with current condition. The Message History can be reviewed to examine other recent events. Note that the audible alarm can be silenced for 24 hrs, 48 hrs, 1 week or permanently in the Service Section of the menu.

In addition to system alarms, there are system warnings. System warnings do not close the optional solenoid valve. A warning allows the problem to be addressed before the solenoid valve closes. If the warnings are left unattended, a system fault may occur. For a warning, the audio alarm will sound once, the amber light will illuminate, the remote will beep once, and a warning message is displayed on the Upstream.

The disinfection of water will occur as long as the unit is properly maintained in accordance with the instructions set out in this manual. Operating a malfunctioning unit or defeating any system sensors may jeopardize the safety of the water. If any system failure occurs and water enters the plumbing system without being disinfected, if the optional shutoff valve has been placed into manual mode, or if the optional bypass is used, any water used for drinking should be boiled. Under these circumstances, the water supply should be disinfected after returning the unit to normal operation.

If water should fall on the unit, unplug the unit and repair leak (or add pipe insulation to prevent condensation runoff). Dry up all remaining water and inspect lamps and reflectors for water spots and clean if necessary– see section on Replacing and Cleaning UV Lamps. Inspect reflectors for water damage. The reflectors are the shiny curved panels in front and behind the lamps. The reflectors may be wiped with a clean soft cloth. If the panels do not come clean or are damaged, they must be replaced.
In the event of an alarm, a physical inspection of the unit with the power off should be done to try to identify a cause. A troubleshooting guide is provided with each alarm or warning message and presented in the Menu Section of the Instruction Manual.

Treatment Alarm
The Treatment Alarm occurs when there is insufficient dose to treat the maximum flow rate designated by the unit. The Treatment Alarm could be a result of low UV intensity or low UV Transmittance (UVT) or a combination of both. Review both values in the Main Menu to determine which is causing the alarm and take corrective action as noted in Troubleshooting section.

Navigating the Menu
See the following pages to review system information including status, Treatment performance and Troubleshooting.

MAIN MENU

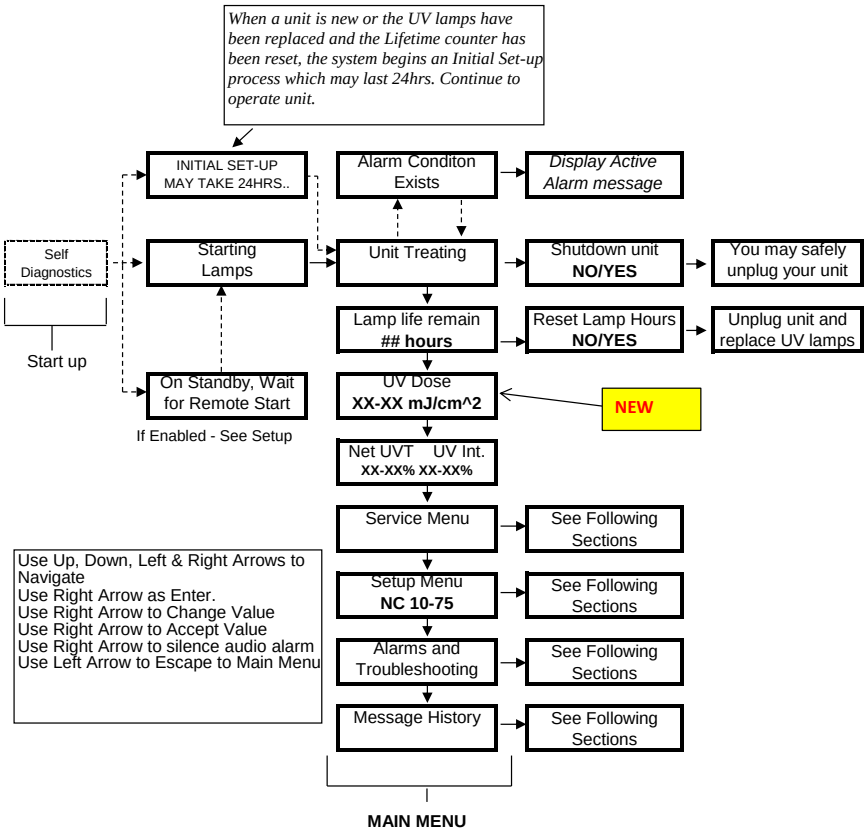
When a unit is new or the UV lamps have been replaced and the Lifetime counter has been reset, the system begins an Initial Set-up process which may last 24hrs. Continue to operate unit.
INITIAL SET-UP MAY TAKE 24HRS..
Alarm Conditon Exists
Display Active Alarm message
Self Diagnostics
Starting Lamps
Unit Treating
Shutdown unit NO/YES
You may safely unplug your unit
Lamp life remain ## hours
Reset Lamp Hours NO/YES
Unplug unit and replace UV lamps
Start up
On Standby, Wait for Remote Start
UV Dose XX-XX mJ/cm^2
NEW
If Enabled - See Setup
Net UVT UV Int. XX-XX% XX-XX%
Service Menu
See Following Sections
Use Up, Down, Left & Right Arrows to Navigate
Use Right Arrow as Enter.
Use Right Arrow to Change Value
Use Right Arrow to Accept Value
Use Right Arrow to silence audio alarm
Use Left Arrow to Escape to Main Menu
Setup Menu NC 10-75
See Following Sections
Alarms and Troubleshooting
See Following Sections
Message History
See Following Sections
MAIN MENU

SERVICE MENU

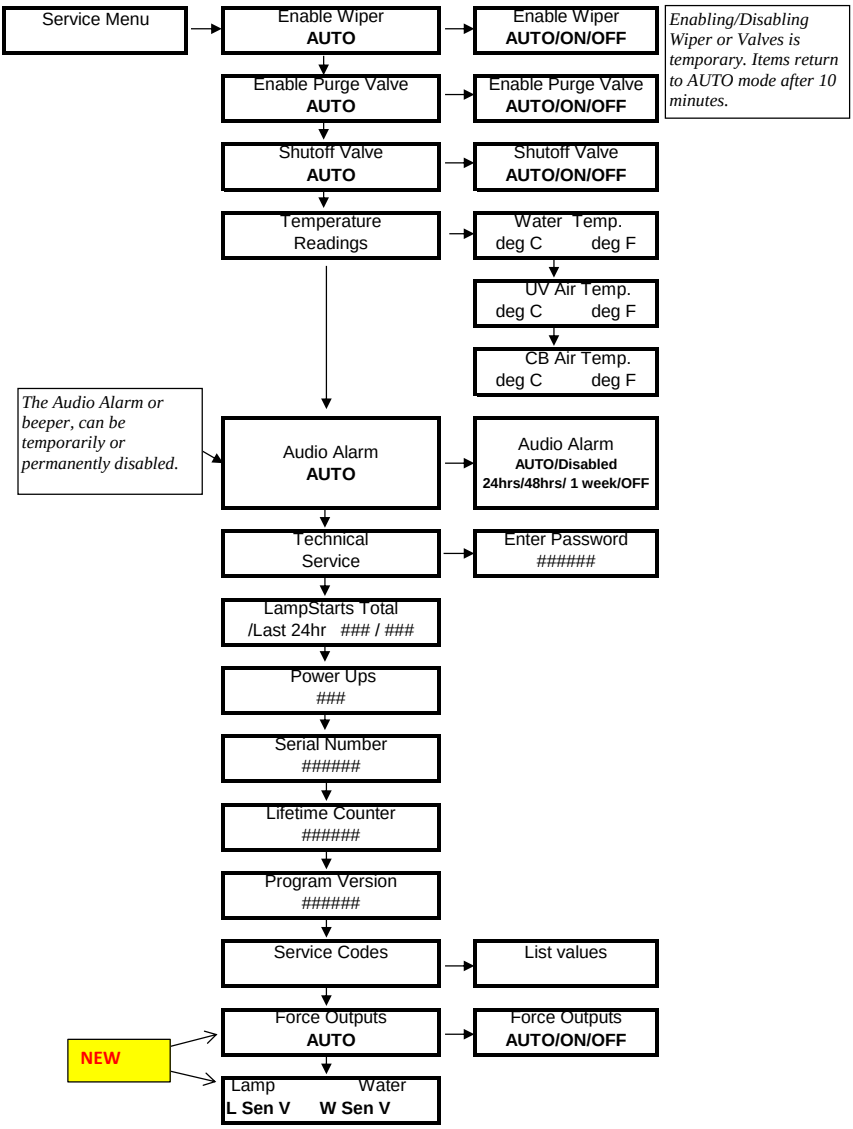

SETUP MENU

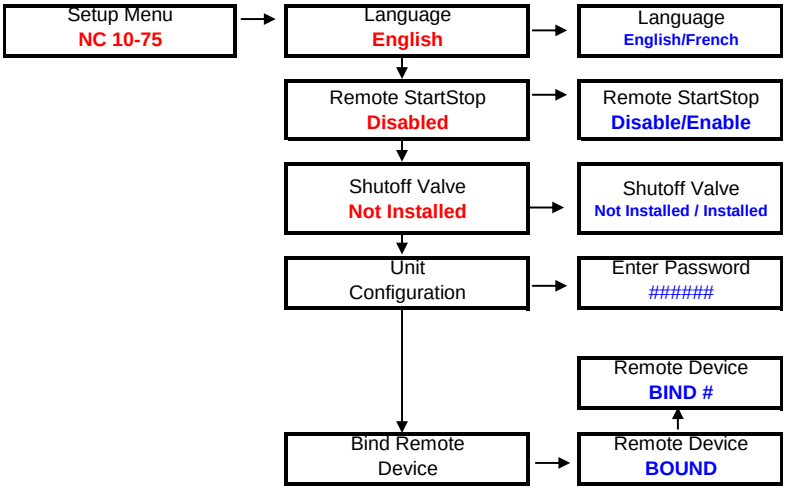

ALARMS & TROUBLESHOOTING MENU

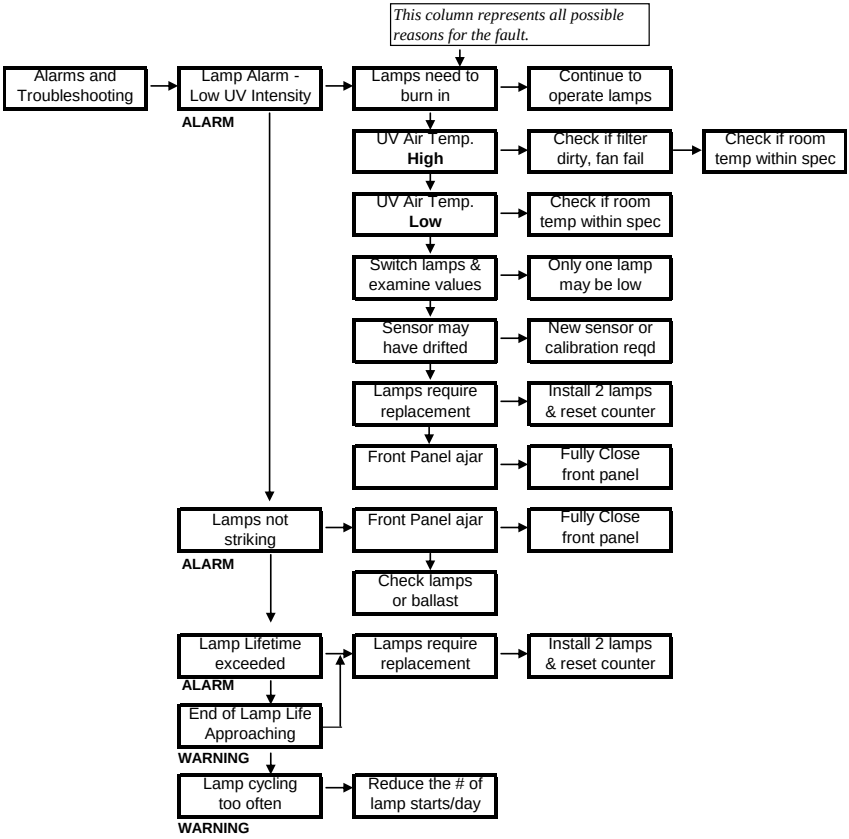

ALARMS & TROUBLESHOOTING MENU (CONT'D)

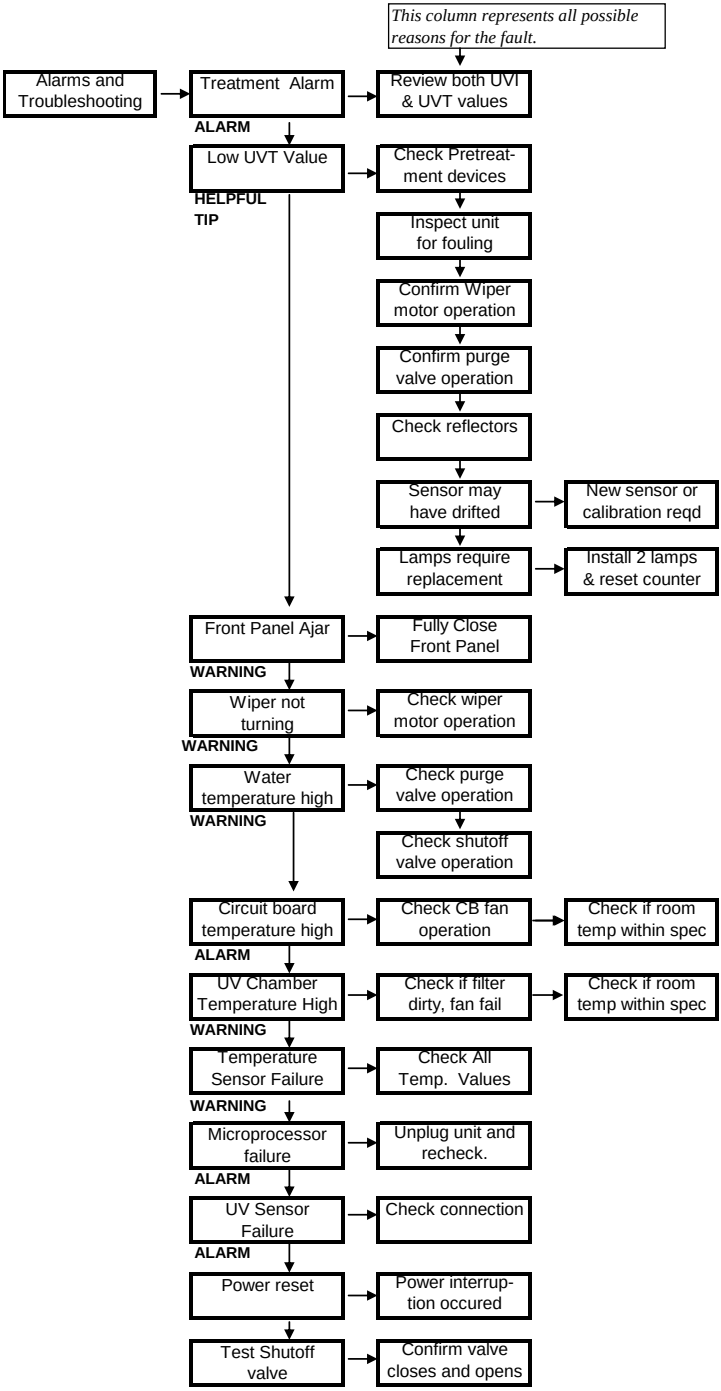

MESSAGE HISTORY MENU

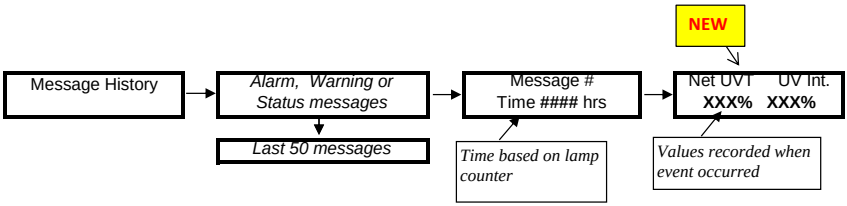

5. MAINTENANCE

Test Shutoff Valve Monthly

The Optional Solenoid Shutoff valve should be tested monthly to confirm it opens and closes. Unplug valve from unit to confirm water stops flowing. Plug the valve in again to confirm water continues to flow.

Clean Air Filter Periodically

The Upstream contains a washable air filter in the blower housing panel (See Figure 1H). Periodically check and clean the filter to ensure blower operation is not impeded.

Replacing and Cleaning UV Lamps

The Upstream contains two ultraviolet (UV) lamps that emit high-intensity UV light in the germicidal range, providing effective disinfection of the water flowing through the unit. The lamps in your unit will decay over time and should be replaced every 12 months for optimum performance.

Your unit has an internal timer to keep track of the lifetime of the lamps. It will issue a warning when the end of their lifetime approaches (see Troubleshooting Guide). The amount of life remaining on the lamps is measured in hours and can be seen in the main section of the menu.

The lamps can be replaced in a few minutes. Draining the unit is not required. See Figure 3.

Caution: The lamps in the unit emit ultraviolet (UV) light that can cause permanent damage to the skin and eyes. **Never look at a lamp when it is operating. Always unplug the unit before replacing lamps.**

Caution: Never touch the bulb (quartz portion) of a lamp with your fingers. Handle the lamp by its ends only. If the surface of the lamp becomes dusty or dirty, use a clean lint-free cloth and some rubbing alcohol to remove the dirt. For more difficult stains such as water spots, use a scale remover to remove the stain and then rubbing alcohol afterwards. The lamps are fragile and must be handled with care.

Tools Needed

- Slotted screwdriver

NOTE: Resetting the Lamp Lifetime counter will clear the Message History, Lamp Starts counter and Power Ups counter. If this information is required, review it first before proceeding to Step 1.

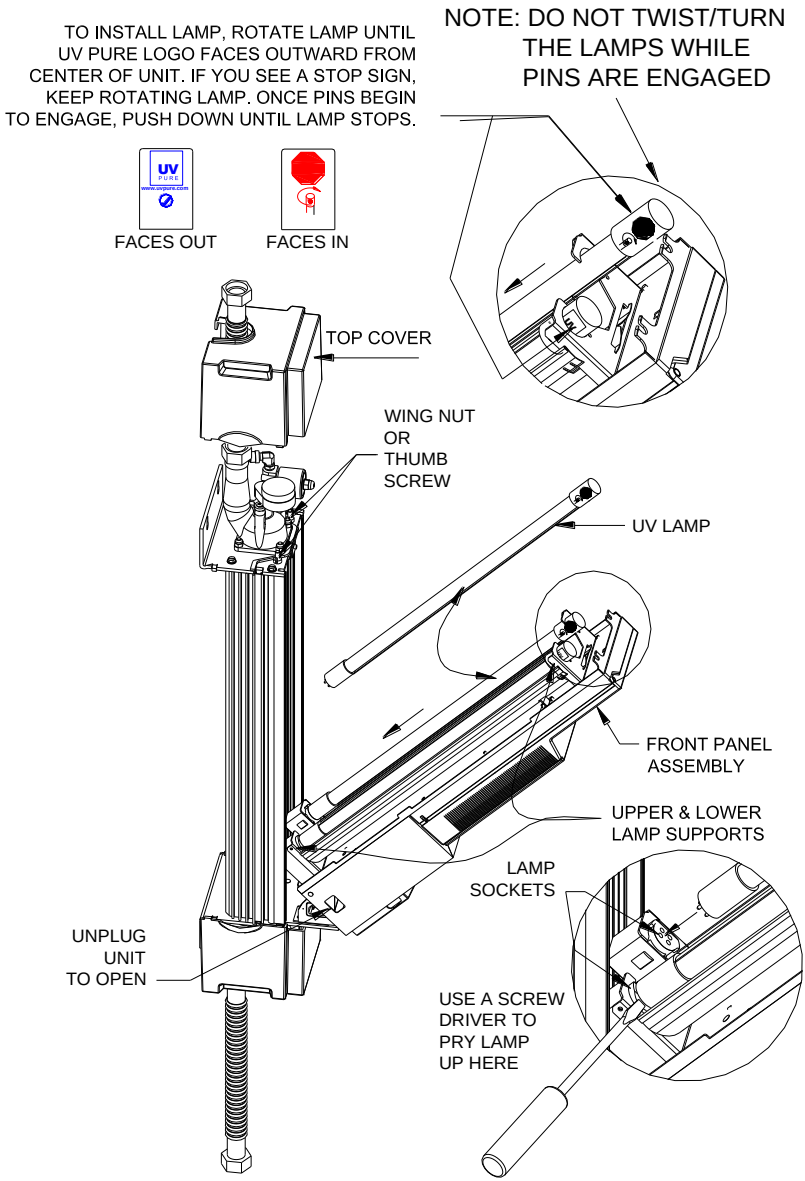

Figure 3

Step 1: From the Main Menu, move down to *Lamp life remaining* screen. Press Enter to move to next screen to reset counter. Press Enter again and then push Up or Down key to select YES and then press Enter. The lamp hours will reset to

9000 and the unit will turn off the lamps automatically. This will close the solenoid valve (optional) and temporarily shut off the water supply. Unplug power cord from left hand side of unit.

Step 2: Remove the top cover by pulling each side of the plastic top cover outward from the unit. This will reveal the two wing nuts that secure the front panel in place. Loosen them so that the front panel may be tilted forward to reveal the lamps. **Hold the front panel** until it comes to rest at a 45° position.

Step 3: Caution: The lamps heat up after continuous use and can burn your skin if touched. Allow lamps to cool for five minutes before removing them. Slowly lift the old lamps out of the unit. For assistance in this task, use a flat screwdriver and pry the lamps up between lamp base and socket (see Figure 3). Dispose of the old lamps in the same way as you would dispose of ordinary fluorescent tubes. Note that old lamps should be disposed of at a household waste management depot or transfer station; contact your local recycling and waste management authority for proper disposal procedures in your area.

Step 4 Install the new lamps into the unit, being careful not to touch the bulb. **Ensure that the lamps are aligned with the "Stop Sign" printed on the top ceramic facing inward (towards quartz sleeve). If you can see the stop sign, the lamps are backward (See Figure 3).**

Once the pins of the lamp begin to engage into the lamp socket, push firmly down on the top of the lamp. **Do not twist the lamps when they are inserted.** The lamp will come to rest when the pins are fully seated into the socket. When pressing down, be sure to position the lamp ceramic end in the center of the hole in the lamp holders. Repeat this for the other side

Step 5: Return the front panel to the upright position and secure it by tightening the wing nuts. Replace the top cover

Step 6: Record the date of the lamp replacement in your Service Record Sheet.

Step 7: Plug in the unit. The system will begin an Initial Set-up process while the lamps are reaching full power. The green light will flash and the amber light will be on solid. This process may last 24 hours. When the Initial Set-up process is complete, a solid green light appears and the message "Unit Treating" will be displayed.

Draining the Unit

The Upstream does not normally require draining for routine operation or lamp replacement. Draining is necessary to disassemble the system, to protect against freezing, or to remove poor-quality water.

Step 1: Shut off the water supply.

Step 2: Shutdown and unplug the unit.

Step 3: Place a bucket under the unit to collect the water.

Step 4: Open a faucet downstream of the unit.

Step 5: If you have installed the optional drain valve, open the drain valve. If you do not have an optional drain valve, disconnect the Stainless flexible hose below the unit and allow the system to drain for a few minutes.

Step 6: When draining is complete, close the drain valve or reconnect the flexible hose.

Step 7: Close any faucets that were previously opened.

Cleaning the Unit

The Upstream has automatic quartz cleaning and does not normally require disassembly and cleaning of the quartz - the quartz will remain clear and transparent as glass. If a component of the cleaning device fails, such as the wiper motor, or in extreme water cases the quartz may become fouled and require manual cleaning. In this situation the UVT alarm will arise and alert you to the unsatisfactory conditions. Follow the steps below to inspect the quartz and disassemble the unit for quartz cleaning.

Caution: Always shutdown and unplug the unit before performing any maintenance. Never operate a unit unless the front panel is completely secured.

Tools Needed

- slotted screwdriver

Determining the Need for Cleaning

Step 1: Shutdown and unplug the unit.

Step 2: Remove the top cover by pulling each side of the plastic top cover outward from the unit, and loosen the wing nuts.

Step 3: Tilt and hold the front panel until it comes to rest at a 45° position.

Step 4: Examine the quartz sleeve both inside and out. If it is clean, no disassembly is required. Return the front panel to the upright position and tighten wing nuts. Plug in the unit and operate as normal.

If the quartz sleeve is dirty on the outside, proceed to wipe it down with a clean lint-free cloth and rubbing alcohol to remove the dirt. If the quartz sleeve is dirty on the inside, proceed with in-place cleaning or disassembly.

Caution: The quartz sleeve can break or chip if mishandled. Always handle it with care and keep it in a safe place if it is removed from the unit. Do not strike the quartz sleeve with any tool, since even the smallest chip can cause it to break under pressure.

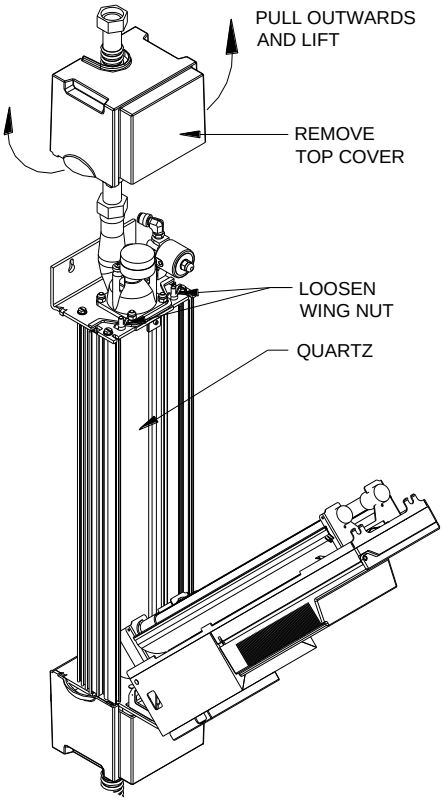

Figure 4A

In-place cleaning

Your Upstream is equipped with a self-cleaning wiper that (in normal operating circumstances) maintains the quartz, and is engineered to ensure years of full disinfection. However, there are rare instances where water chemistry requires some manual quartz cleaning as well. This procedure will clean the quartz without its removal from the unit. This is a quick and easy procedure that works well in most cases.

Step 1: Fill a bucket or container with water before shutting off the water supply since you will need the water later to clean the quartz sleeve. A squeeze bottle is useful for applying water or cleaning solution to the inside of the quartz sleeve.

Step 2: Shutdown the unit, unplug and open the front panel by pulling each side of the plastic top cover outward from the unit. This will reveal the two wing nuts. Loosen them so that the front panel may be tilted forward to reveal the lamps. **Hold the front panel** until it comes to rest at a 45° position.

Step 3: Place another bucket under the unit and drain the unit until there is about 1” (3cm) of water left in the quartz sleeve (see Draining the Unit).

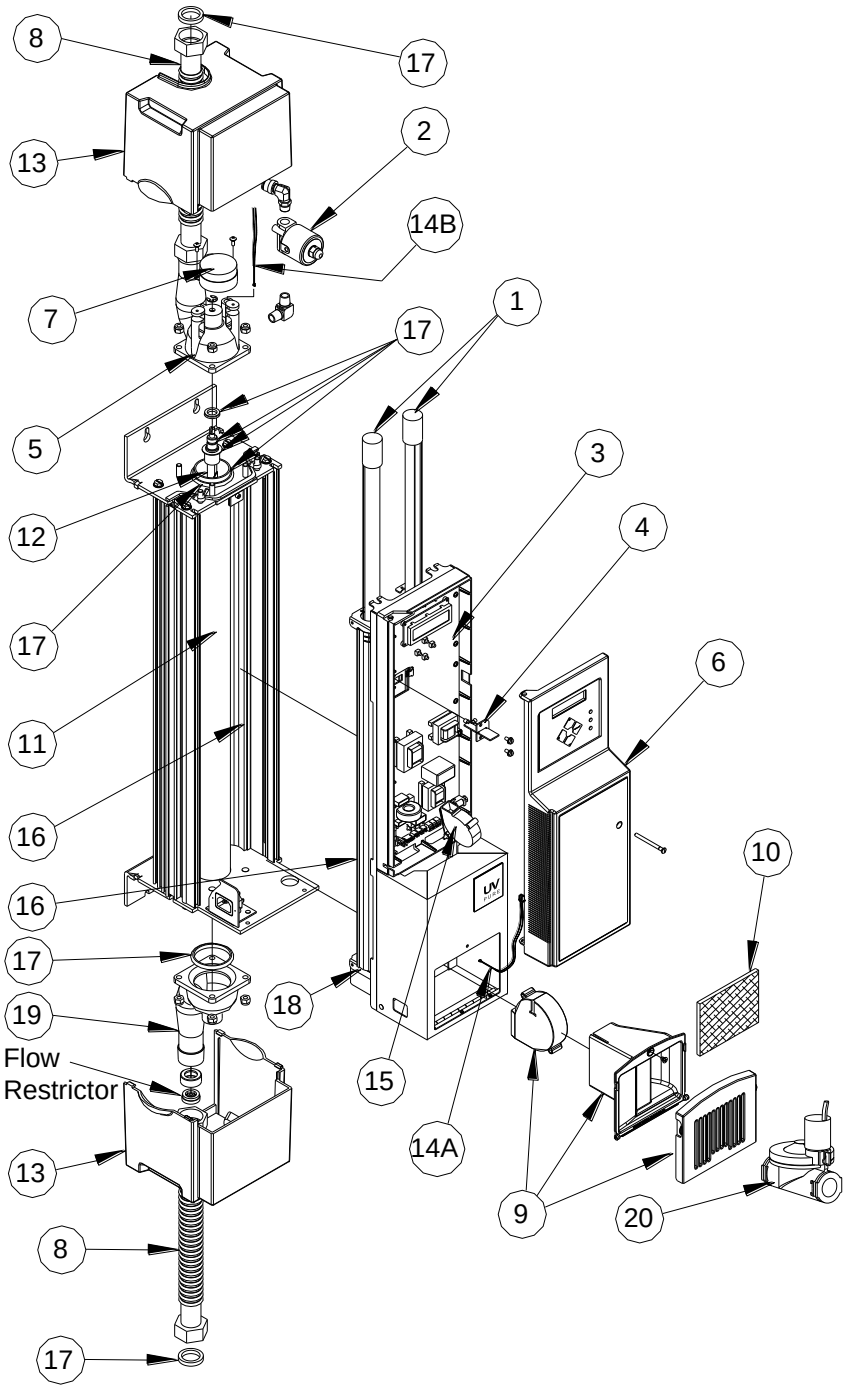

Figure 4B – Upstream

Upstream Spare Parts List

Item No.	Part Name	NC10-75	NC10-50	NC15-75	NC15-50	NC30-75 1”	NC30-75 1.5”
1	UV Lamps (Shipped in pairs)	E300165					
			E300210				
					C300065		
2	Purge Valve Repair Kit	R400046					
3	Circuit Board / Ballast 120V*	R400055	R400056	R400057	R400058	R400059	R400060
	Circuit Board / Ballast 100-240V*	R400061	R400062	R400063	R400064	R400065	R400066
4	UV Sensor Array Replacement Kit	R400002					
5	Top SS Manifold/Thermistor/Purge Valve Replacement,	R400016					R400077
6	Cabinet Door	R400022	R400067	R400068	R400069	R400070	R400071
7	Wiper Motor Kit	R400005					
8	1" Flexible SS Hose	R400007					
	1 1/2" Flexible SS Hose						C500001
9	Reactor Cooling Blower Kit (including filter)	R400008					
10	Fan Filter	R400009					
11	Quartz sleeve Replacement Kit (including seals)	R400001	R400010		R400012		
12	Wiper Assembly Kit	R400006	R400011		R400013		
13	Top or Bottom Cap	R400017					
14A	Air Thermistor Replacement Kit	R400018					
14B	Water Thermistor Replacement Kit	R400044					
15	Circuit Board Cooling Fan Replacement Kit	R400019					
16	Reflector Kit (shipped & sold in pairs)	R400024	R400026		R400028		
17	Seal Kit (complete)	R400031					R400079
18	Lamp Socket Wire Harness	R400033					
19	Bottom SS Manifold, 1”	R400047					R400078
20	Optional Solenoid shut-off Valve For 120V models	E500021 (Coil voltage is 24Vac)					
							C500017
	Optional Solenoid shut-off Valve For 100-240V models	E500021U (Coil voltage is 24Vac)					
							C500017U
21	Remote Monitor Kit - (Contains handheld & Transmitter)					R400054	
22	Remote Monitor (Handheld unit only)					R400030	
23	Transient Voltage Surge Suppressor 120V Systems					150207	

Figure 4B – Upstream Parts List

***Do not replace the fuse in the unit if it blows. A blown fuse indicates major circuit board fault. Replace entire circuit board. Inspect lamps-replace if discolored.**

Step 4: Disconnect the **top** hose from the plumbing side (not the unit side but other end).

Step 5: Add about 2 oz. (60cc) of cleaning solution to the top hose. The cleaning solution can be a citric acid, vinegar or other non-hazardous solutions. **Any solution used should be thoroughly rinsed out afterwards.** Fill the rest of the quartz with water.

Step 6: Let the cleaning solution remain in the quartz for at least 10-20 minutes.

Step 7: Manually turning the wiper may greatly assist the cleaning process. To do this, remove the motor assembly and turn the wiper shaft with a flat-bladed screwdriver (counterclockwise while looking at the shaft).

Step 8: Drain the unit and inspect the quartz sleeve. If clean, flush the unit with clean water. If fouling remains, repeat procedure.

Step 9: Once the unit is clean, reassemble the unit including the motor and top hose connection.

Step 10: Slowly open the water supply and check for leaks.

Step 11: Replace all covers and plug in the Upstream unit.

Disassembling the Unit

NOTE: This procedure is not recommended for individual household users please contact your certified water specialist to assist should disassembly be required.

Step 1: Fill a bucket or container with water before shutting off the water supply since you will need the water later to clean the quartz sleeve (11). A squeeze bottle is useful for applying water or cleaning solution to the inside of the quartz sleeve.

Step 2: Place another bucket under the unit and drain the unit (see Draining the Unit).

Step 3: Open the front panel. The lamps may be removed to prevent them from getting dirty or damaged.

Step 4: Disconnect the Stainless flexible hose (8) from the top of the unit and remove the top quartz seal assembly.

Caution: Do not damage the sealing surfaces of the end caps (5 and 19) or the shaft of the wiper assembly (12). Handle these parts with care to prevent water leaks.

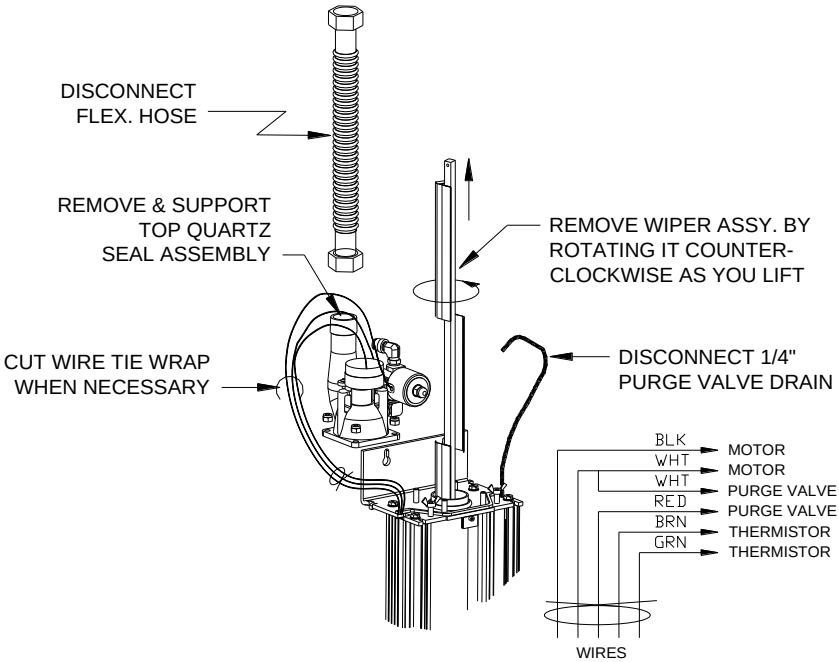

Figure 4C

Use a 7/16” (11mm) wrench to remove the four nuts in an alternating pattern (top left, bottom right, bottom left, then top right). The bottom quartz seal assembly does not require removal to clean the quartz, so leave it in place. This will support the quartz sleeve during cleaning and simplify the overall process.

Step 5: Remove the top quartz seal assembly (Figure 4C) by lifting it straight up. The wires are bundled together using a tie wrap. If you require more room to lift the top quartz seal assembly, cut the tie wrap to give you more freedom to lift the assembly over the wiper shaft.

Step 6: Remove the wiper assembly (21) by carefully lifting it up and out of the quartz sleeve. Rotating it as you lift will help. **Caution: the wiper blades are sharp, handle them with care.**

Cleaning/Removing the Quartz Sleeve

Note that numbers in parentheses refer to Figure 4B.

Step 1: Use a bottle cleaning brush with a long handle to scrub the inside of the quartz sleeve. Scrub and flush it with water repeatedly to clean the quartz. Use a squeeze bottle to apply water or solution to the quartz sleeve to keep the area tidy. **Note: Keep the rest of the unit free from moisture.** Examine the quartz.

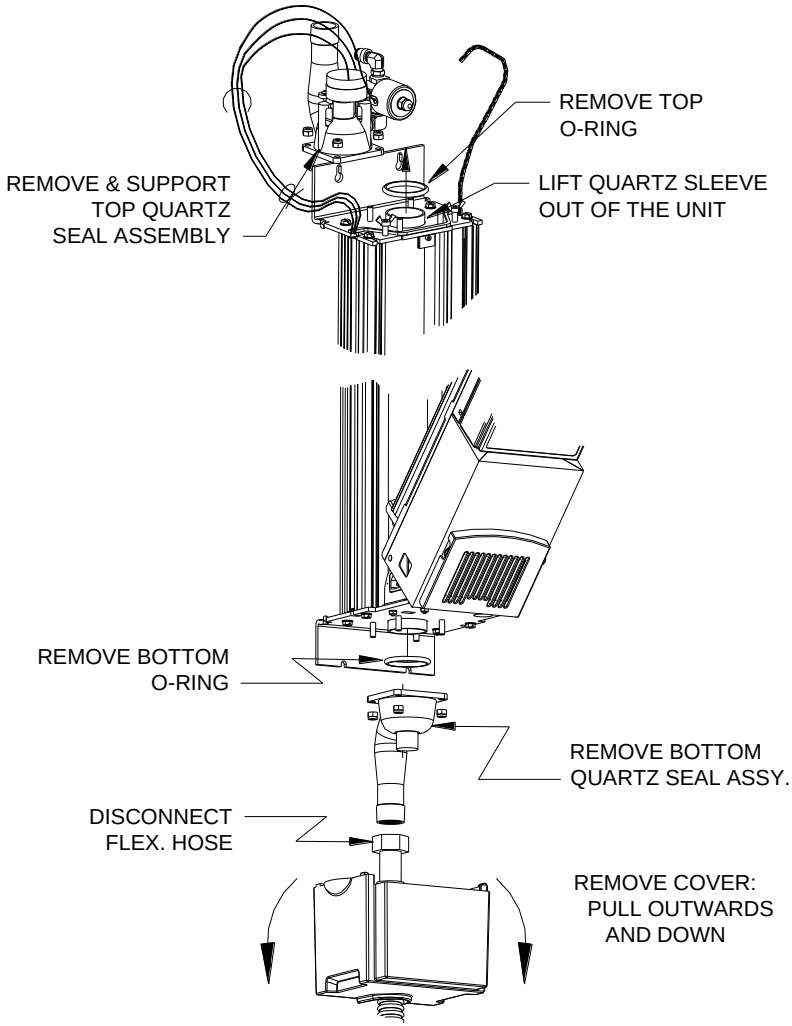

Figure 4D

Step 2: If the quartz is still dirty, use a scale remover such as CLR or Lime Away and apply it to the inside of the quartz sleeve. Citric acid, available at a drug store, can also be used. **Always flush with clean water afterwards.**

Step 3: Once the quartz is clean, reassemble the unit (see Figure 4E). Replace any seals that appear to have been damaged.

Step 4: If the quartz is still not clean, it requires replacement. This is done by removing the bottom quartz seal assembly (see Figure 4D).

Step 5: Remove the bottom cover and then the bottom quartz seal assembly by

pulling the plastic tabs of the cover out and down and then undoing the four nuts in an alternating pattern (top left, bottom right, bottom left, then top right). Support the quartz sleeve as you remove this item.

Step 6: Remove the quartz sleeve by removing the top and bottom O rings. Lift the quartz sleeve out of the unit.

Step 7: Install the new quartz sleeve into the unit and center it vertically. **Be careful not to chip the ends.** You may open the front of the unit to assist you in aligning the quartz sleeve if necessary. Support the quartz for the next two actions.

Step 8: Replace the top and bottom O rings, keeping the quartz centered vertically in the unit.

Step 9: Replace the bottom quartz seal assembly (Figure 4D) by installing the four fasteners in an alternating pattern (top left, bottom right, bottom left, then top right) Ensure that the connection port is at the backside of the unit.

Reassembling the Unit

Note that numbers in parentheses refer to Figure 4B.

Step 1: Replace the wiper assembly (12) carefully in the quartz sleeve. The hole on the end of the shaft must be up. Turn the wiper assembly counter-clockwise (looking from the top) as it is being inserted into the quartz – this will make the task easier and align the wiper blades properly. Wetting the inside of the quartz with water will also make the task easier.

Step 2: Ensure the quartz O-ring seal is in place around the quartz sleeve and then replace the top quartz seal assembly by aligning the shaft adapter with the wiper shaft (see Figure 4E). Rotate wiper shaft CCW to suit.

Step 3: Tighten the nuts in an alternating pattern. Bundle the wires if necessary.

Step 4: Reconnect the flexible hoses (8), both top and bottom. Close the front panel.

Step 5: Close any faucets and open the water supply. Inspect for leaks. The solenoid valve (optional) can be placed into manual mode to allow water to enter the unit. Switch back to automatic mode when done. Repair any leaks if necessary. **Caution:** Do not operate the unit if there are any leaks at the piping connections or within the unit.

Step 6: Replace the lamps.

Step 7: Reinstall the top and bottom covers.

Step 8: Plug in the unit.

Step 9: Make an entry in the service record to establish a cleaning schedule.

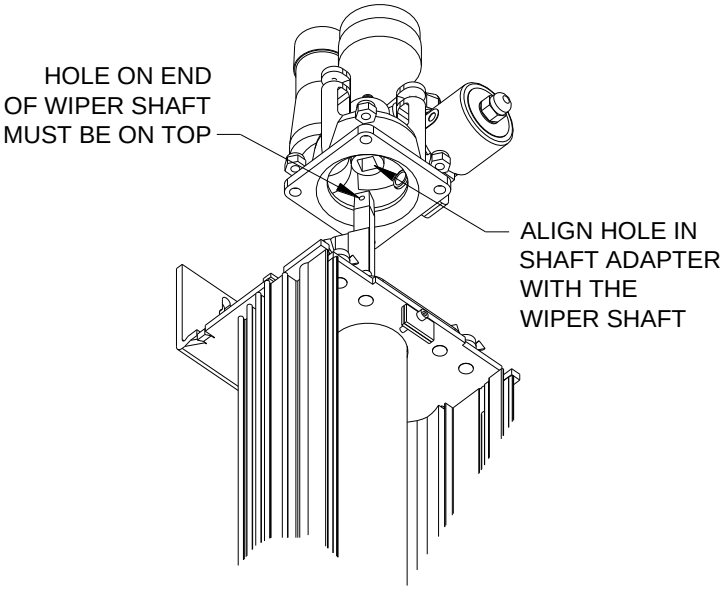

Figure 4E

Replacement Parts

Use only genuine UV Pure Technologies' parts when servicing your Upstream disinfection system. Failure to use genuine UV Pure Technologies' replacement parts will void the factory warranty, and any laboratory validation and/or certification for water safety and system operating performance. Figure 4B shows a complete list of original factory parts.

Replacement parts and service are available from your Installer, a Certified Service Dealer (CSD), or directly from UV Pure Technologies on our e-commerce site: www.uvpuredirect.com . A complete list of Certified Service Dealers and their coverage areas is available on UV Pure's website: www.uvpure.com .

Manufactured by: **UV Pure Technologies Inc.**
60 Venture Drive, Unit 6
Toronto, Ontario, Canada, M1B 3S4
Phone: 416-208-9884
Toll Free (USA & CDA) 1-888-407-9997
Fax: 416-208-5808
e-mail inquiries: info@uvpure.com www.uvpure.com

Date of Purchase:

Dealer Name:

Model: Serial Number:

(S/N located on the left side of the front panel below power cord entry)

6. Service Record Sheet

Record lamp replacement dates and events in the space provided below.

Date (MMM/DD/YYYY)	**Action**
	System Installed

7. UV PURE TECHNOLOGIES LIMITED WARRANTY

Limited Warranty for UV Pure Technologies'® water purification systems and peripheral parts purchased in Canada, the United States, Australia and New Zealand.

What this warranty covers:

Defects in materials and workmanship in Products and Parts manufactured by UV Pure Technologies Inc. (UV Pure) including Hallett® systems, Upstream® systems, Cactus™ systems and parts such as replacement UV lamps other original equipment manufacturer components such as manifolds or NEMA cabinets sold or certified by UV Pure Technologies Inc.

What the period of coverage is for UV Pure Products and Parts:

Five-year Limited Warranty for structural, hardware, and mechanical components. Specifically, this includes the following UV Pure Parts: system casing (powder coated steel parts, machined and extruded aluminum parts, stainless steel parts, and ABS molded components), stainless steel and CPVC manifolds, NEMA cabinets, welded steel skids and structural components, stainless steel self-cleaning mechanism, mechanical fasteners, and stainless steel flexible connector hoses.

Three-year Limited Warranty for electrical components, reflectors, and quartz sleeve. Specifically, this includes the following UV Pure Parts: wiper motor, air blowers, circuit boards, ballast and micro-processor with digital display, wiring harnesses, lamp sockets, reflectors, quartz sleeve, and remote monitor (excluding any battery if included).

One-year Limited Warranty for lamps, sensor probes, and remote lamp replacement reminder alarm. Specifically this includes the following UV Pure Parts: UV lamps, UV sensors and the circuit board they are mounted in, temperature probes, purge valves, and the remote lamp replacement reminder alarm.

One –year Limited Warranty for all replacement lamps

Ninety-day Limited Warranty or Balance of Original Warranty for replacement Parts or Products. Specifically this includes any UV Pure Parts or Products replaced or repaired under this Limited Warranty, and any Parts purchased for routine service or maintenance. This warranty period is for balance of the original warranty or for 90 days from the date the Product or Part is repaired and/or returned to the first end-user whichever is longer. An exception is all replacement lamps that are covered for one year from date of replacement.

Who is covered:

This Limited Warranty extends to you only if you are the FIRST END-USER PURCHASER and with respect to the ORIGINAL INSTALLATION; the **warranty period shall commence upon the Date of Purchase**.

What we will do to correct problems covered by this Limited Warranty:

During the warranty period, as set out above, UV Pure will repair or replace Products or Parts, at its sole discretion and cost, with the exception of shipping and handling charges. UV Pure may require that certain failed part be returned to UV Pure within 45 days for analysis and to facilitate continuous improvement; for example, circuit boards and sensors that fail must be returned to UV Pure. Replacement parts or systems may be functionally equivalent reconditioned/refurbished/pre-owned or new products or parts at UV Pure's sole discretion. UV Pure may provide software updates, at its discretion, but is under no obligation to do so. Based on an agreement between UV Pure and its service providers, Certified Service Dealers, this warranty will be honoured by either UV Pure or a Certified Service Dealer.

In North America, based on an agreement between UV Pure and its service providers, Certified Service Dealers, this warranty will be honoured by either UV Pure or a Certified Service Dealer.

Outside North America UV Pure has appointed Distributors that will honour this warranty and that provide service directly or via local Certified Service Dealers.

How to get help:

Call a Certified Service Dealer (CSD) or UV Pure's Customer Service toll free line: 1-888-407-9997. A complete list of Certified Service Dealers and their coverage areas is available on UV Pure's website: www.uvpure.com. Or, email UV Pure's Customer Service Center: info@uvpure.com.

What this Limited Warranty does NOT cover:

Maintain your original PROOF OF PURCHASE. UV Pure or its Certified Service Dealers reserve the right to deny warranty coverage if you cannot provide proof of original purchase including date of purchase, who you purchased the Product or Part from, and serial number.

USE OF REPLACEMENT UV LAMPS THAT ARE NOT ORIGINAL UV PURE EQUIPMENT WILL VOID THIS WARRANTY.

USE OF REPLACEMENT UV LAMPS THAT ARE NOT ORIGINAL UV PURE EQUIPMENT WILL INVALIDATE CERTIFICATION TO OR BY NSF, MENV, EPA, AND OTHER VALIDATION PROTOCOLS AND CERTIFYING BODIES.

All UV lamps lose power over their usable lifetime; original equipment UV Pure lamps are engineered and tested to ensure that all of our systems achieve the minimum power for disinfection specified, at the end of lamp life. Lamps that are not made by, or that are not approved by UV Pure may not meet those same

high standards. Of course UV Pure performs rigorous testing of its systems and original equipment components to its own high quality control standards, and external testing and certification protocols are performed with original equipment UV Pure lamps. NON-ORIGINAL EQUIPMENT UV LAMPS have not been approved by certifying bodies, thereby invalidating those tests and certifications. If you have a question as to whether UV Pure lamps are original equipment, please call our Toll Free Customer Service line at: 1-888-407-9997.

UV Pure may source and supply equipment that is manufactured and warrantied by other companies (the Original Equipment Manufacturer) and **offered as options** in conjunction with UV Pure's Products and Parts. For example: heaters or AC units used in NEMA cabinets, solenoid shut-off valves, filter housings and inserts, UPS power supplies, and on-line instrumentation or web-enabling communications equipment. **Warranties for those components are solely the responsibility of the Original Equipment Manufacturer, and NOT UV Pure.** UV Pure uses reasonable efforts to ensure that OEM options are of the highest quality possible and consistent with UV Pure's high standards.

UV Pure is not responsible for Parts or Products that are improperly installed, used and/or not maintained as set out in the Product Manual or as expressly advised by UV Pure. This Limited Warranty does not cover damage caused by accidents, acts of God, minor scratches or imperfections and normal wear and tear. This Limited Warranty is void if the Product is improperly installed, used in conditions that exceed UV Pure's specifications as set out in the Manual or Product Specifications, or if there is water damage due to improper installation or poorly or improperly tightened plumbing connections. This Limited Warranty is void if the Product or Parts have been altered or modified in any way by anyone other than a UV Pure technician or a Certified Service Dealer. Warranty coverage may be void if the Product is operated in combination with ancillary or peripheral equipment not approved by UV Pure for use with the Products.

UV Pure's water purification systems are technically advanced. Certain models include UV sensors that monitor treatment effectiveness via on-board computers. Like all computers, they may be sensitive to fluctuations in the power grid, like surges or brown outs. UV Pure supplies Transient Voltage Surge Protectors (that have been certified to UL1449 standard or equivalent) with its Hallett and Upstream models in North America to help protect against damage from power fluctuation. Those models must be plugged into the supplied protectors in North America, and into equivalent protectors outside North America (not supplied with systems in those markets). Failure to install voltage protection in Hallett or Upstream installations will void warranty coverage. UV Pure highly recommends that all installations of its systems incorporate voltage protection.

This Limited Warranty excludes the cost of labour in removing and/or reinstalling any defective Product or Part. In the event that a Product is returned to UV Pure for repair or replacement under the terms of this Limited Warranty, the Product must be returned in its original shipping container and packaging. UV Pure will not be liable for damage to the Product during shipping otherwise.

UV Pure does not assume any liability for personal injury or property damage caused by the use or misuse of any Product or Part. UV Pure is not liable for special, incidental, indirect or consequential damages. UV Pure's liability is limited to repair or replacement of the defective Part or Product and this liability shall terminate upon the expiration of the applicable warranty period as set out above.

This Limited Warranty may be amended or changed at any time, at UV Pure's sole discretion, without notice.

UV Pure offers inspection and refurbishing for older systems.

To assist our customers, UV Pure's certified technicians can provide inspection, recommendations, cost estimates, and complete refurbishing of older systems that may be out of warranty.

TO THE EXTENT PERMITTED BY APPLICABLE CONSUMER PROTECTION LAWS, ANY WARRANTIES PROVIDED FOR HEREIN ARE IN LIEU OF ANY OTHER WARRANTY, AND ALL OTHER WARRANTIES ARE HEREBY DISCLAIMED, WHETHER EXPRESS OR IMPLIED.

The information contained in this document is subject to change without notice. UV Pure Technologies Inc. shall not be liable for errors contained herein or for consequential damages from improper installation or operation of this unit.

UV Pure Technologies Inc.
60 Venture Drive, Unit 6
Toronto, Ontario
M1B 3S4
www.uvpure.com