UV PURE®

Call Us: 1-888-407-9997

Technical Data Sheet
Hallett™ 500PN

www.uvpure.com

Potable Water Applications

Model	Hallett 500PN
Validation protocol	NSF/ANSI 55 CLASS A by NSF International Watermark of Australia

Operating Range

Flow (single unit)	Up to 16.5 US gpm (62.5 Lpm)
UV dose	Min. 40 mJ/cm^2
UV Transmittance [UVT] (water)	Minimum 75% UVT
Hardness (water)	Maximum 855 mg/L (50 gpg)
Iron (water)	Maximum 3 mg/L (3 ppm)
Temperature (air and water)	34 - 104°F (1 - 40°C)
Water pressure	5 - 100 psig (34 - 690 kPa)
Relative humidity (air)	Maximum 70%

Features

Quartz sleeve cleaning	Built-in - automatic mechanical wiper
Wiper position switch	Built-in
Purge valve	Built-in
Cooling	Built-in - forced air
Flow restrictor	Standard - internal
Shut-off valve	Optional - automatic solenoid

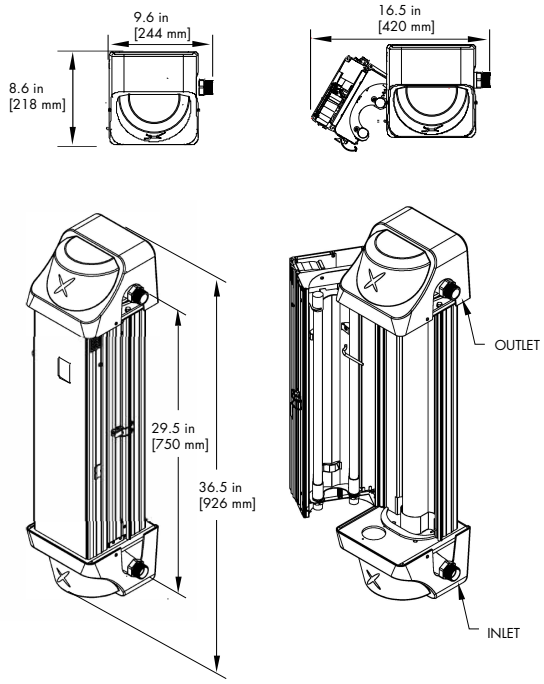

Electrical/Instrumentation

Voltage	120 VAC/60 Hz; or 230 VAC/50 Hz
Power consumption (nominal)	196 W
Certifications	UL 979; IEC 60335-1; IEC 60335-2-109; CE
UV lamps	Dual LPHO - air mounted
Lamp life (typical)	9,000 hours
Lamp cycles (recommended) (preheat ballast)	Maximum 12 per 24 hours
Sensors	Dual UV - calibrated to NIST standards
Dry contacts	Built-in - 2 provided (warning and alarm)
Interface	Colour LCD resistive touchscreen display
Alarming	Indicator light and audible alarms
Remote start/stop	Built-in
Onboard diagnostics	Built-in
4-20mA Output & Modbus	Optional

Physical

Dimensions (H x W x D)	36.5 x 9.6 x 8.6 in (926 x 244 x 218 mm)
Weight (dry)	32 lb (14.6 kg)
Weight (wet)	36 lb (16.3 kg)
Wetted parts	Meets NSF/ANSI/CAN 61 & NSF/ANSI 372 for water up to 73°F (23°C)
Body materials	Anodized aluminum and 316 Stainless Steel
Body configuration	Double door with side hinges
Inlet/outlet ports	1" MNPT Stainless Steel, optional - Stainless Steel hose
Ingress Protection rating	IP 51, optional - IP 66 for NEMA cabinet systems
Multiple units	Multiplex manifold and cabinets available
Warranty	5-year limited warranty for structural, hardware and mechanical components; 3-year limited warranty on electrical components and quartz sleeves; 12-month limited warranty on bulbs; and 1-year limited warranty on sensor probes

Contact a UV Pure representative to confirm product operating parameters for specific applications.

info@uvpure.com

v.20221111

MADE IN CANADA

The Hallett 500PN is installed indoors on a wall in a dry location. The unit should be plumbed in downstream of any pretreatment devices but upstream of distribution plumbing. The Hallett 500PN plugs into a 120Vac ground-fault circuit-interrupter (GFCI) or a 230Vac residual current device (RCD) (dependent on territory). The Hallett 500PN incorporates both audible and visual alarms to indicate system status and an optional normally closed solenoid valve is available to shut off the water supply in the event of a system fault.

The automatic quartz cleaning feature is engineered to eliminate the periodic maintenance required by conventional UV systems. The UV lamps p/n E300209, Lamp Pair p/n E300210, require replacement after 12 months of operation.

System Tested and Certified by NSF International against NSF/ANSI Standard 55 for Disinfection Performance, Class A.

This Class A system conforms to NSF/ANSI 55 for the disinfection of microbiologically contaminated water that meets all other public health standards. This system is not intended to convert wastewater or raw sewage to drinking water. The system isintended to be installed on visually clear water.

NSF/ANSI 55 defines wastewater to include human and/or animal body waste, toilet paper, and any other material intended to be deposited in a receptacle designed to receive urine and/or feces (blackwaste); and other waste materials deposited inplumbing fixtures
(greywaste).

If this system is used for the treatment of untreated surface waters or ground water under the direct influence of surface water, a device found to be in conformance for cyst reduction under the appropriate NSF/ANSI Standard shall be installed upstream of the system.

Manufactured by: UV Pure Technologies Inc.
455 Milner Avenue Toronto, Ontario,
M1 B 2K4
416-208-9884
888-407-9997
info@uvpure.com

All replacement parts may be purchased through UV Pure.

The following table is in accordance with standard AS 3497:2021

CATEGORY	TREATMENT	FUNCTION	Hallett 500PN
I	Bacteriostatic	Will stop bacteria increasing but will not remove them unless Category II(a) is passed	N/A
II(a)	Bacterial removal	Will remove or inactivate bacteria	PASS
II(b)	Virus removal	Will remove or inactivate viruses*	PASS
II(c)	Protozoa removal	Will remove or inactivate Cryptosporidium and Giardia. Will not remove or inactivate bacteria and viruses unless Category II(a) and Category II(b) are passed.	PASS
III	Turbidity and particulate removal	Reduces cloudiness	N/A
IV	Taste and Odour reduction	Reduces tastes and odours	N/A
V	Chemical contaminant reduction	Decreases certain chemicals	N/A
VI	Other treatment type not captured in Categories I to V	No verification methods are defined	N/A

*Most viruses such as poliovirus and rotavirus

UV PURE®

Call Us: 1-888-407-9997

Technical Data Sheet
Hallett™ 750PN

www.uvpure.com

Potable Water Applications

Model	Hallett 750PN
Validation protocol	NSF/ANSI 55 CLASS A by NSF International Watermark of Australia

Operating Range

Flow (single unit)	Up to 27.4 US gpm (104 Lpm)
UV dose	Min. 40 mJ/cm^2
UV Transmittance [UVT] (water)	Minimum 75% UVT
Hardness (water)	Maximum 855 mg/L (50 gpg)
Iron (water)	Maximum 3 mg/L (3 ppm)
Temperature (air and water)	34 - 104°F (1 - 40°C)
Water pressure	5 - 100 psig (34 - 690 kPa)
Relative humidity (air)	Maximum 70%

Features

Quartz sleeve cleaning	Built-in - automatic mechanical wiper
Wiper position switch	Built-in
Purge valve	Built-in
Cooling	Built-in - forced air
Flow restrictor	Standard - internal
Shut-off valve	Optional - automatic solenoid

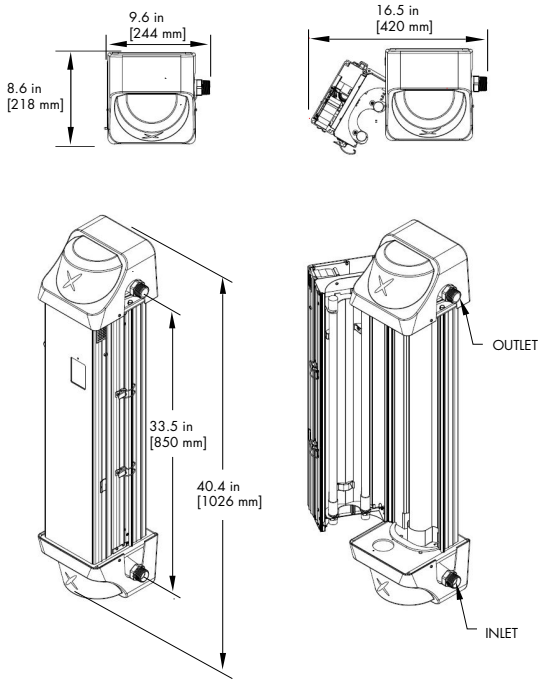

Electrical/Instrumentation

Voltage	120 VAC/60 Hz; or 230 VAC/50 Hz
Power consumption (nominal)	222 W
Certifications	UL 979; IEC 60335-1; IEC 60335-2-109; CE
UV lamps	Dual LPHO - air mounted
Lamp life (typical)	9,000 hours
Lamp cycles (recommended) (preheat ballast)	Maximum 12 per 24 hours
Sensors	Dual UV - calibrated to NIST standards
Dry contacts	Built-in - 2 provided (warning and alarm)
Interface	Colour LCD resistive touchscreen display
Alarming	Indicator light and audible alarms
Remote start/stop	Built-in
Onboard diagnostics	Built-in
4-20mA Output & Modbus	Optional

Physical

Dimensions (H x W x D)	40.4 x 9.6 x 8.6 in (1026 x 244 x 218 mm)
Weight (dry)	34 lb (15.5 kg)
Weight (wet)	38 lb (17.2 kg)
Wetted parts	Meets NSF/ANSI/CAN 61 & NSF/ANSI 372 for water up to 73°F (23°C)
Body materials	Anodized aluminum and 316 Stainless Steel
Body configuration	Double door with side hinges
Inlet/outlet ports	1" MNPT Stainless Steel, optional - Stainless Steel hose
Ingress Protection rating	IP 51, optional - IP 66 for NEMA cabinet systems
Multiple units	Multiplex manifold and cabinets available
Warranty	5-year limited warranty for structural, hardware and mechanical components; 3-year limited warranty on electrical components and quartz sleeves; 12-month limited warranty on bulbs; and 1-year limited warranty on sensor probes

Contact a UV Pure representative to confirm product operating parameters for specific applications.

info@uvpure.com

v.20221111

MADE IN CANADA

The Hallett 750PN is installed indoors on a wall in a dry location. The unit should be plumbed in downstream of any pretreatment devices but upstream of distribution plumbing. The Hallett 750PN plugs into a 120Vac ground-fault circuit-interrupter (GFCI) or a 230Vac residual current device (RCD) (dependent on territory). The Hallett 750PN incorporates both audible and visual alarms to indicate system status and an optional normally closed solenoid valve is available to shut off the water supply in the event of a system fault.

The automatic quartz cleaning feature is engineered to eliminate the periodic maintenance required by conventional UV systems. The UV lamps p/n C300064, Lamp Pair p/n C300065, require replacement after 12 months of operation.

System Tested and Certified by NSF International against NSF/ANSI Standard 55 for Disinfection Performance, Class A.

This Class A system conforms to NSF/ANSI 55 for the disinfection of microbiologically contaminated water that meets all other public health standards. This system is not intended to convert wastewater or raw sewage to drinking water. The system is intended to be installed on visually clear water.

NSF/ANSI 55 defines wastewater to include human and/or animal body waste, toilet paper, and any other material intended to be deposited in a receptacle designed to receive urine and/or feces (blackwaste); and other waste materials deposited inplumbing fixtures
(greywaste).

If this system is used for the treatment of untreated surface waters or ground water under the direct influence of surface water, a device found to be in conformance for cyst reduction under the appropriate NSF/ANSI Standard shall be installed upstream of the system.

Manufactured by: UV Pure Technologies Inc.
455 Milner Avenue Toronto, Ontario,
M1 B 2K4
416-208-9884
888-407-9997
info@uvpure.com

All replacement parts may be purchased through UV Pure.

The following table is in accordance with standard AS 3497:2021

CATEGORY	TREATMENT	FUNCTION	Hallett 750PN
I	Bacteriostatic	Will stop bacteria increasing but will not remove them unless Category II(a) is passed	N/A
II(a)	Bacterial removal	Will remove or inactivate bacteria	PASS
II(b)	Virus removal	Will remove or inactivate viruses*	PASS
II(c)	Protozoa removal	Will remove or inactivate Cryptosporidium and Giardia. Will not remove or inactivate bacteria and viruses unless Category II(a) and Category II(b) are passed.	PASS
III	Turbidity and particulate removal	Reduces cloudiness	N/A
IV	Taste and Odour reduction	Reduces tastes and odours	N/A
V	Chemical contaminant reduction	Decreases certain chemicals	N/A
VI	Other treatment type not captured in Categories I to V	No verification methods are defined	N/A

*Most viruses such as poliovirus and rotavirus